CVMC
COMBO COUPLER

CRAIG™

CVMC

COMBO COUPLER

FEATURES AND BENEFITS

Offering superior visibility and minimal extension on the loader arms, the Craig Combo Coupler allows you to use your existing fleet of OEM specific hook-up attachments with no modifications on any brand of carrier.

MAXIMUM VISIBILITY

The Craig Combo Coupler features a high visibility design that allows the operator to easily see through the coupler to the attachment they are hooking up to. Each Combo Coupler is put through a Finite Element Analysis (FEA) to ensure the coupler is strong enough to stand up to the job while still maintaining a high visibility design.

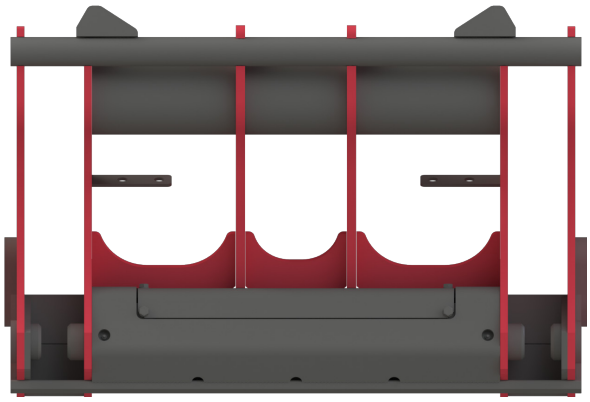

Coupler ribs ensure coupler strength and offer maximum visibility.

GUARANTEED FIT

Craig Manufacturing fits all couplers with a jig to ensure our Combo Coupler will fit up to your specified OEM hook-up.

QUALITY ASSURANCE

Craig Manufacturing builds products we're proud to stand behind. Each Quik Key Coupler is inspected prior to shipping to ensure that our customers receive a quality product that will provide years of trouble free operation.

CRAIG
CUSTOMER SUPPORT CENTER
1-800-565-5007

Finite Element Analysis (FEA) is performed in a program called SOLIDWORKS Simulation. Using our 3D product models, SOLIDWORKS Simulation calculates component displacements, strains, and stresses under internal and external loads. This tool allows us to test the integrity of our designs before they even enter production.

PRECISE FIT-UP

Precision is key when it comes to fitting up to your machine. Craig align bores the machine pin-on hook-up of the Combo Coupler to ensure precise OEM hook-up tolerances and easy installation when pinning the coupler onto your machine.

Machine pin-on hook-up of Combo Coupler.

VARIOUS CONFIGURATIONS

Make your attachments work for your machine with the Craig Combo Coupler. Easily adapt your new machine to work with the OEM hooks on your existing fleet of attachments. The Craig Combo Coupler offers minimal extension to the loaders arms and is available for a wide variety of OEM hook-up configurations.

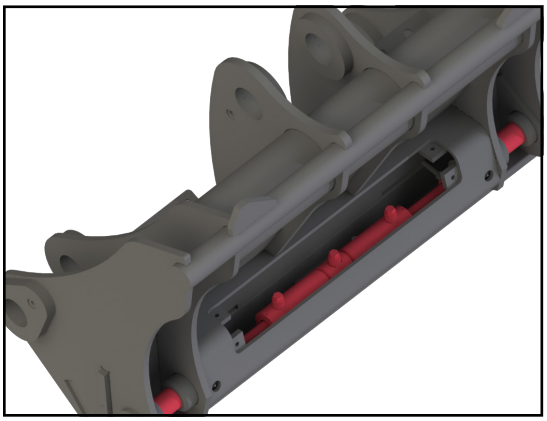

Hydraulically actuated locking pins (protective cover hidden to show cylinder).

HYDRAULIC PIN ACTUATION

Hydraulic pins lock the attachment onto the coupler. Locking pins feature up to 10° of oscillation to allow for easier alignment and to better accommodate the attachment as it wears. Lock pin assembly available with grease fittings if requested.

COUPLER HYDRAULICS

The Craig Combo Coupler comes standard with cross over hoses that fit up to the factory machine hydraulics - cross over hose fittings not compatible with Caterpillar machines. Complete coupler kits also available from Craig.

DURABLE DESIGN

Each Combo Coupler is custom designed for the specific application it will be working in. The base coupler features a rugged tube construction design with a protected cylinder to prevent damage from debris. In some cases, reinforcing and different material types are used in the coupler to suit the application it will be used in.

A large centrally located tube is the backbone of the Combo Coupler's durable design. The hydraulic cylinder is protected by a cover to prevent debris from damaging the cylinder.

HARTLAND OFFICE
96 McLean Avenue
Hartland, New Brunswick
E7P 2K5 Canada

Ph: (506) 375-4493

CAMBRIDGE OFFICE
315 Thompson Drive
Cambridge, Ontario
N1T 2B3 Canada

Ph: (519) 623-9500

BLACKFALDS OFFICE
88 27323 TWP Rd 394
Lacombe County, Alberta
T4M 0S1 Canada

Ph: (403) 356-0048

LAWRENCEBURG OFFICE
408 Commerce Way
Ethridge, Tennessee
38456 USA

Ph: 1-800-867-1006

CRAIG™
ENGINEERING. MANUFACTURING. SERVICE.

1-800-565-5007 • WWW.CRAIGATTACHMENTS.COM