T4900WP / T0600WP
FOLDING WING PLOW

CRAIG™

T4900WP / T0600WP

FOLDING WING PLOW

FEATURES AND BENEFITS

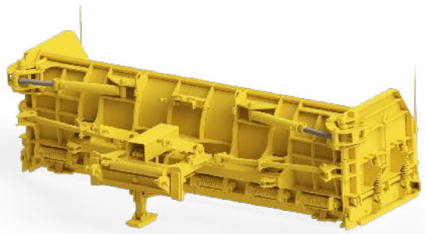

The Craig Folding Wing Plow is designed to be the ultimate multi-function snow fighting tool. The adjustable end gates allow it to be used as a reversible plow, box plow, and back dragging plow. Available for backhoes and medium sized wheel loaders. The machine will require an auxiliary valve to operate the plow, electric over hydraulic diverter valve and in-cab controls are included with the plow.

VARIOUS WIDTHS AVAILABLE

The Craig Folding Wing Plow is available in multiple combinations of main blade widths and end gate lengths.

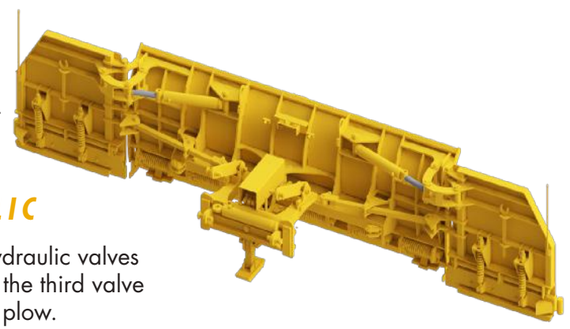

ON-BOARD ELECTRIC OVER HYDRAULIC

The Craig Folding Wing Plow comes with electric over hydraulic valves that allow the functions on the plow to be operated using the third valve on the loader. In-cab controls are included to operate the plow.

END GATE CYLINDERS

Cylinders control the end gates on the plow and flow control valves allow the speed of the end gates to be adjusted to suit the operators preference.

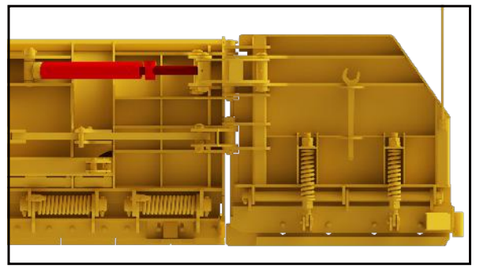

End gate open/close cylinders.

MAIN BLADE

Easily replaceable torsional trip edge springs allow the plows cutting edge to trip when encountering objects, such as raised man holes and protect, the plow from damage.

STANDARD TRIP EDGE END GATES WITH ADJUSTABLE TRIP SPRINGS

Trip edge end gates are now standard feature and allow the end gates to trip when encountering large objects. End gates have two manually adjustable compression springs to suit application and terrain.

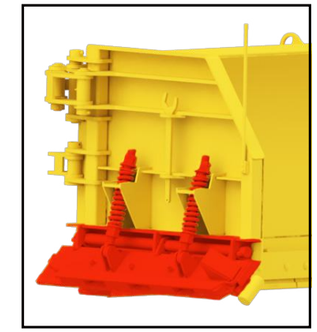

Trip edge end gate.

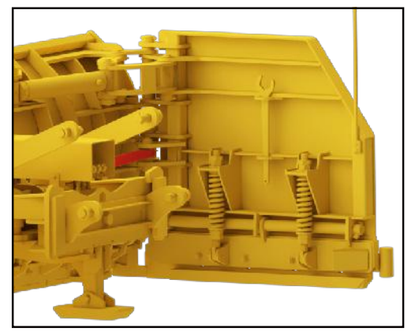

Hydraulic tire protection system.

TIRE PROTECTION SYSTEM

The tire protection system prevents end gates from contacting and damaging the tires on the machine. This system can be adjusted to accommodate machine width.

REVERSIBLE BOLT-ON CUTTING EDGES OR OPTIONAL SALT SAVER LIVE EDGE

Plow moldboard comes with reversible bolt-on cutting edges to protect the plow from wear and allow for a longer service life. The end gate comes with a long life wear edge.

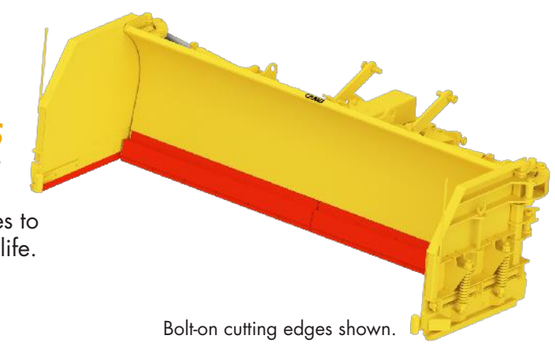

Bolt-on cutting edges shown.

SEE OUR SALT SAVER BROCHURE TO LEARN MORE ABOUT OUR LIVE EDGE SYSTEM!

Follow the true contours of the road with the new Salt Saver live edge system – now available on all Craig Manufacturing snow plows. Designed as a cleaner, greener plow edge solution, the Salt Saver is designed to follow uneven paved surfaces for improved snow removal over a traditional style edge. Use up to 50% less salt and enjoy cleaner roads with the Salt Saver live edge system.

CRAIG
CUSTOMER SUPPORT CENTER
1-800-565-5007

HARTLAND OFFICE
96 McLean Avenue
Hartland, New Brunswick
E7P 2K5 Canada

Ph: (506) 375-4493

CAMBRIDGE OFFICE
315 Thompson Drive
Cambridge, Ontario
N1T 2B3 Canada

Ph: (519) 623-9500

BLACKFALDS OFFICE
88 27323 TWP Rd 394
Lacombe County, Alberta
T4M 0S1 Canada

Ph: (403) 356-0048

LAWRENCEBURG OFFICE
408 Commerce Way
Ethridge, Tennessee
38456 USA

Ph: 1-800-867-1006

CRAIG™
ENGINEERING. MANUFACTURING. SERVICE.

1-800-565-5007 • WWW.CRAIGATTACHMENTS.COM