CRAIG™
ENGINEERING. MANUFACTURING. SERVICE.

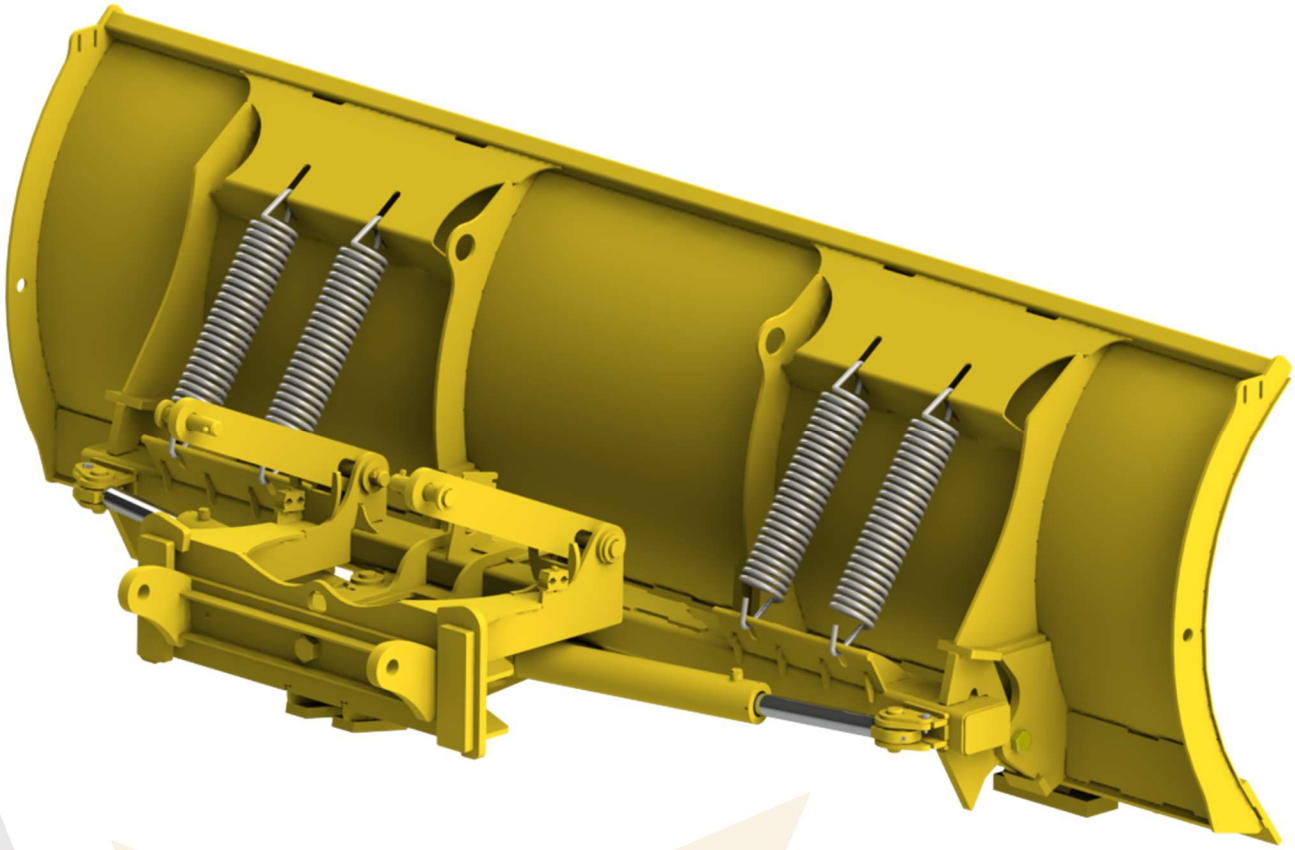

0600 PLOW

0600 SERIES REVERSIBLE SNOWPLOW

OWNER'S MANUAL

Important safety and operation instructions inside

Read thoroughly before operating

CRAIG MANUFACTURING LTD.
96 Mclean Ave
Hartland, New Brunswick
E7P 2K5 Canada

Tel: 1-506-375-4493
Toll Free: 1-800-565-5007

Email: sales@craigattachments.com
Website: www.craigattachments.com

TABLE OF CONTENTS

PREFACE

INTRODUCTION

SAFETY INSTRUCTIONS

DECALS

INSTALLATION INSTRUCTIONS

OPERATION INSTRUCTIONS

TROUBLESHOOTING

MAINTENANCE

STORAGE

SPECIFICATIONS

PARTS

PREFACE

Congratulations on the purchase of your new Craig Manufacturing Ltd. product. This manual provides safety, operation, and maintenance information. To keep your product in good condition, please read this manual and follow all recommendations. Failure to do so may invalidate your warranty.

When parts or service are necessary contact Craig at 1-800-565-5007 for genuine Craig Parts. Before using your product, make sure your machine is equipped with all the OEM recommended requirements for your product application.

CRAIG FACTORY ORIGINAL PARTS

CRAIG
CUSTOMER SUPPORT CENTER
1-800-565-5007

The best way to ensure equipment reliability is to use only genuine Craig Manufacturing Ltd. Factory Original Parts. Our parts department can help you not only find the right part for your application but also offers advice and support for the repair. Using aftermarket non-approved parts can alter your product's performance characteristics and may affect your warranty.

To help ensure that correct parts are ordered, please record the serial number of your product. Over time serial tags can become tarnished or difficult to read. Please supply this serial number to your dealership when ordering parts and it will ensure the correct part gets ordered.

Serial: _____

Machine: _____

Model: _____

In-Service Date: _____

Purchased From: _____

Never let anyone operate this unit without reading the "SAFETY INSTRUCTIONS" and "OPERATION INSTRUCTIONS" sections of this manual.

NOTE: The illustrations and data used in this manual were current (according to the information available to us) at the time of printing, however, we reserve the right to redesign and change the attachment as may be necessary without notification.

INTRODUCTION

As the new owner and/or operator of the Craig reversible plow we require you take the time to read this Operator's Manual carefully before commencing work.

FOLLOW THE SAFETY INSTRUCTIONS

- Carefully read all the safety information contained in this manual.
- Make sure all safety decals are securely fitted in the cab.
- Immediately replace any safety decals that are missing or damaged.
- Before starting work make sure you have a copy of this Operator's Manual in the cab and are familiar with all the safety procedures and instructions contained in this manual.

INFORMATION FOR THE USER

The user of the Craig attachment is obliged to ensure that the equipment is always in safe working order in accordance with accident prevention regulations, Occupational Safety and Health regulations or any other official instructions.

ENHANCED WARRANTY FOR ELIGIBLE PRODUCTS

Craig offers an enhanced warranty from 12 months (or 2,000 hours which ever comes first) to 36 months (or 6,000 hours) for **eligible products**. To take advantage of this enhanced warranty the eligible product must be registered within 30 days of receiving the product. You can register your product at the following website:

https://www.craigattachments.com/product-registration/

Refer to the contents of this manual to remedy faults and contact Craig at 1-800-565-5007 if you require assistance. Notice that unauthorized modifications to this equipment is prohibited and will void warranty.

SAFETY INSTRUCTIONS

This is an alert symbol. It indicates an imminent or potential hazard. Signal words "DANGER", "WARNING", and "CAUTION" qualify this alert symbol into the following categories:

DANGER	Hazardous situation which, if not avoided, WILL result in death or serious injury
WARNING	Hazardous situation which, if not avoided, COULD result in death or serious injury
CAUTION	Hazardous situation which, if not avoided, could result in minor or moderate injury

The signal word "***NOTICE***" indicates important information that, if not followed, could result in severe damage to equipment or property.

SAFETY PRECAUTIONS BEFORE OPERATION

The primary responsibility for safety with this product falls to the operator. Make sure the product is operated only by trained individuals that have read and understood this manual. If there is any portion of this manual or function you do not understand, contact your local authorized dealer, or Craig Manufacturing Ltd. Keep this manual available for reference.

WARNING!

Read Manual Prior to Installation, Operation or Maintenance
Improper installation, operation, and/or maintenance of your Craig Manufacturing Ltd. attachments can cause death or bodily injury, property damage, or damage to your equipment. Read and understand this manual and all labels before operating or doing any work on the equipment. NEVER allow anyone to operate this unit without first reading the safety and operating instructions. Failure to do so may affect your warranty.

Read your machines owner's manual and always be aware of capacities and heights of all materials moved are within the machines stated operational capacity.

Understand All Safety Decals and Statements
Become familiar with and inform users about all safety decals and safety statements in all manuals and on the back of the attachment prior to operating or working on this product. Know and follow all national occupational safety regulations, local laws, and other professional guidelines. As well as all good work practices when working on or with this product. Know your equipment capabilities and operations.

Worn, damaged, or illegible safety decals must be replaced. New safety decals can be ordered from your local dealer.

SAFETY INSTRUCTIONS

WARNING!

Inspect all equipment prior to operating and ensure all components are in proper working order. Check hardware for tightness and that all guards and safety devices are in place. Know all decals and check for legibility. Replace anything damaged, worn or missing. Make sure operator cab is clean and free of any distracting objects or spills.

Be aware of overhead or buried utilities. Contact your local utilities to locate any underground lines or other hazards.

Make sure all levers, pedals, switches, or other controls are in neutral position prior to starting the engine.

Before exiting the machine, for any reason, follow the "MANDATORY SHUT DOWN PROCEDURE".

MANDATORY SHUT DOWN PROCEDURE

1. Stop the machine on level ground.
2. Lower the attachment to the ground.
3. Move throttle to the idle position.
4. Disengage all power to the attachment.
5. Apply the brakes.
6. Turn off the engine and remove the key.

Never use your attachment as a work platform or personnel carrier

Never lift, move, or swing an attachment over anyone.

Do not use attachment for lifting materials outside of its purpose. This attachment is not a lifting device unless approved for your jurisdiction.

Never perform any work on the attachment unless you are authorized and qualified to do so. Work in pairs. Always read the operator service manuals before any repair is made. Wear proper PPE.

Personal Protective Equipment (PPE) Required
Remove ignition key and immobilize the machine during installation, inspection, or service. Always follow safe work practices when installing, servicing, or inspecting your product by wearing only snug-fitting clothing, removing jewelry, and securing long hair. Wear safety goggles to protect your eyes from hydraulic fluid, sparks, dirt, and dust. Always have a fire extinguisher rated BC on hand for flammable liquid and electrical fires. Lastly, always lift with your legs, and use lifting equipment when applicable.

SAFETY INSTRUCTIONS

WARNING!

CRUSH HAZARD – DO NOT work under or around raised arm or attachment.
Lower or Support Unstable/Raised Equipment. NEVER trust that the hydraulic system will not fail. ALWAYS lower booms and attachments to the ground before leaving the cab or operator's station. DO NOT work under or around attachments or heavy items not supported by stands, blocks or safety chains. Furthermore, it is important to use chains and/or stands to steady unstable attachments or heavy components that may fall if being disconnected.

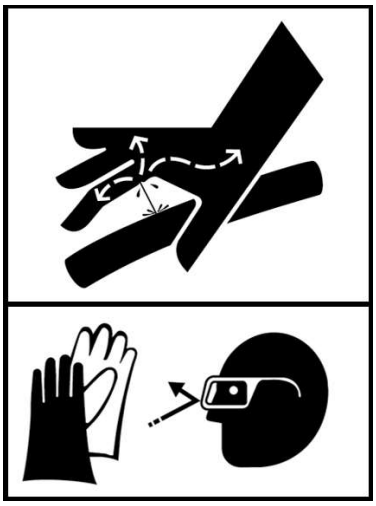

Skin Injection Hazard

- Relieve pressure before working on system
- Wear gloves & eye protection
- Detect leaks with wood or cardboard
- NEVER use hands to detect leaks
- Fluid injected in skin must be surgically removed

Hydraulic Safety

Always inspect hydraulic components before operating your product. Replace any damaged or worn parts immediately. Temperature changes can change hydraulic pressure, which allow the cylinders to drop unexpectedly, causing injury or damaging hydraulic components. Hydraulic fluid under pressure can cause bodily harm. If you suspect a hydraulic leak note the following:

- The high pressure of the hydraulic lines can cause leaks that can puncture flesh. Therefore, it is important to keep uncovered body parts such as face, eyes, and arms away from a suspected leak.
- Flesh injected with hydraulic fluid may develop gangrene or other permanent disabilities. If injured by leaking hydraulic fluid, see a doctor immediately. Hydraulic fluid could have injected into the wound, and it may not be known.
- Before disconnecting hydraulic lines, wait until the fluid cools down. Hot hydraulic fluid can cause severe burns.
- Always wear protective clothing, such as gloves and safety glasses, and use a piece of cardboard when searching for hydraulic leaks. DO NOT USE YOUR HANDS.

Never make hydraulic repairs while the system is under pressure. Serious personal injury or death could occur. Never work under a raised attachment. Check the weight of the attachment and use handling equipment of sufficient capacity.
Always tag "DO NOT OPERATE" until all problems are corrected.

SAFETY INSTRUCTIONS

WARNING!

Lubricants may contain toxins, cause adverse health effects or be hazardous to the environment. Ensure environmentally safe disposal. Observe all safety labels.

Do Not Alter Attachment

Any alterations to this product could affect the safety and performance of the attachment. When making repairs, use only Craig Manufacturing Ltd. parts, and follow the provided procedures. If the parts and procedures are not used the warranty is void and any alterations may cause the attachment to become unsafe. Any modifications must be authorized in writing by Craig Manufacturing Ltd.

Safe Transport

- Travel only with the attachment in a safe transport position to prevent uncontrolled movement. Drive slowly over rough terrain and slopes.
- When transporting on a trailer, secure attachment using tie downs in recommended locations to maintain attachment stability.
- When driving on public roads use safety lights, reflectors, and slow-moving vehicle signs to prevent accidents. Check local government regulations that may affect you.
- Do not drive close to ditches or excavations, because a cave-in could occur.

Keep attachment close to the ground when engaging/disengaging attachments!

It is possible to drop an attachment during engaging and disengaging procedures. Therefore, it is best to make sure the attachment is kept close to the ground. Visually check that the attachment is securely locked before operating. Follow the procedures outlined in the operation section of this manual. If coupler is not functioning properly, it must be checked/repaired by a qualified service technician prior to use. Failure to do so could result in serious injury or death.

SAFETY INSTRUCTIONS

CAUTION!

Remove Paint Before Welding or Heating
When paint is heated by welding, or by using a torch, hazardous fumes/dust can be generated. Therefore, it is important to do all work in a well-ventilated area and dispose of paint and solvent properly. TURN OFF ENGINE AND DISCONNECT BATTERY PRIOR TO WELDING. Refer to machine's owner's manual for procedure.

When removing paint:

- It is important to wear an approved respirator when sanding or grinding paint.
- If you use a paint stripper or solvent, remove the stripper with soap and water.
- Remove solvent or paint stripper containers and other flammable material from the welding/heating area.
- Allow fumes to disperse at least 15 minutes before welding or heating.

DECALS

Item	Part #	Description	Quantity
1	164961-XX	Mechanical float, run plow level	1
2	166593-XX	Not a lifting device	1
3	164953-XX	Grease frequently	1
4	495919-XX	Pressure setting	1
5	164958-XX	Danger – pinch point	1

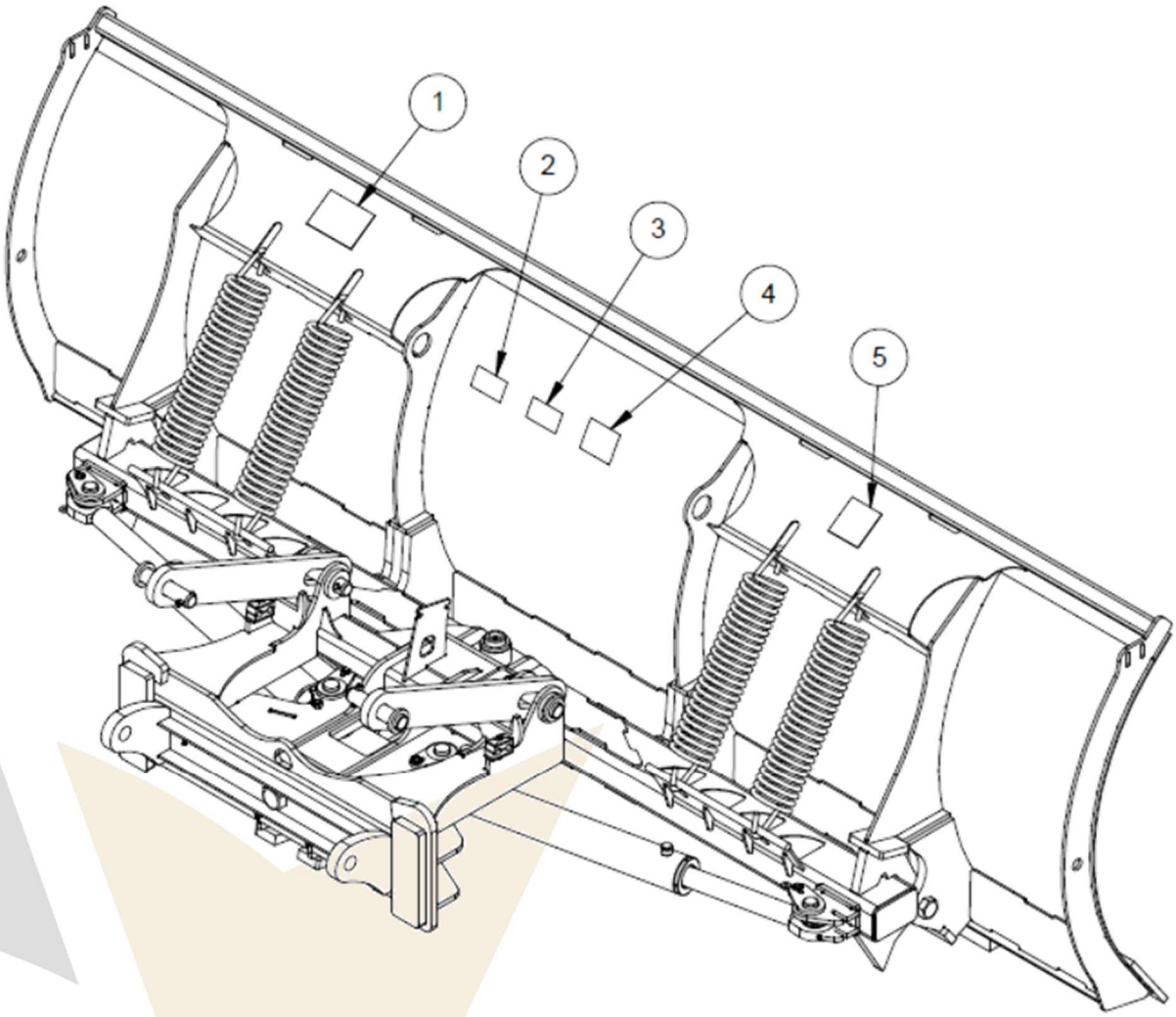

DECALS

NOTICE

- Adjust to center of slot for mechanical float
- Ensure plow runs level to prevent premature edge wear

164961-EN

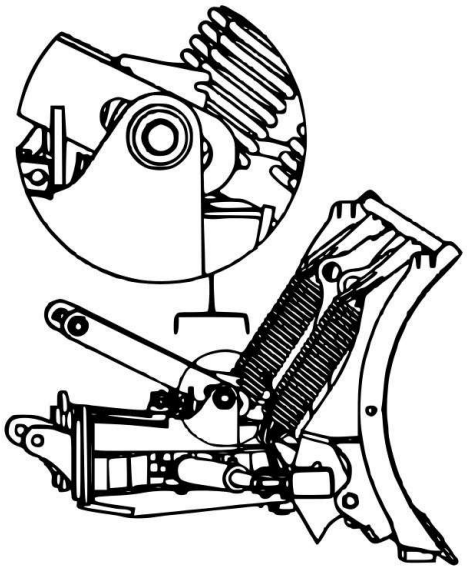

INTENDED USE

Not a lifting device.
For handling attachment only.

166593-EN

NOTICE

Grease frequently

164953-EN

NOTICE

This attachment must be connected to a valve section that is set no higher than:

1600 PSI

495919-EN

DANGER

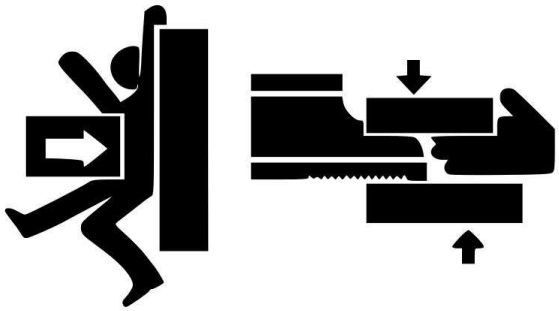

PINCH POINT HAZARD

164958-EN

INSTALLATION INSTRUCTIONS

NOMENCLATURE

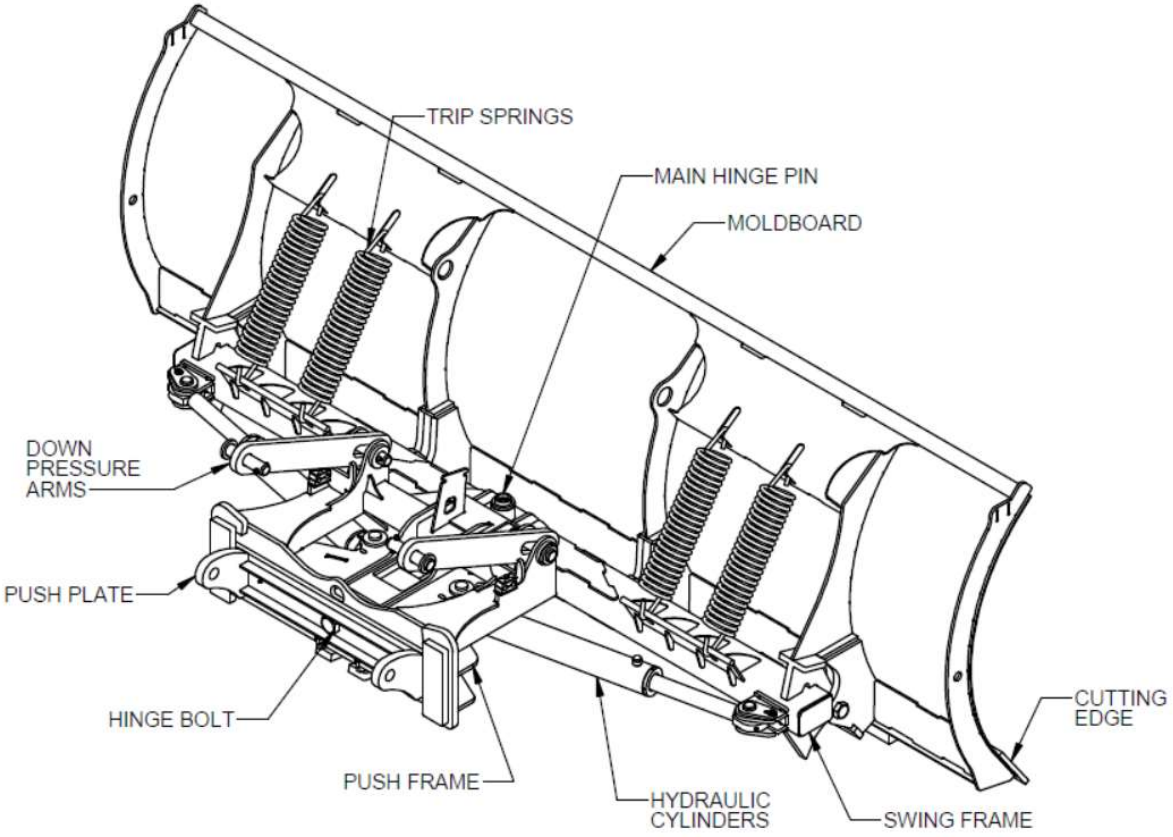

NOTE: *YOUR PRODUCT MAY NOT APPEAR EXACTLY AS SHOWN*

INSTALLATION INSTRUCTIONS

TERMINOLOGY

Cutting Edge:	The consumable wear component located on the bottom of the base edge. Cutting edge must be replaced periodically to protect the moldboard.
Moldboard:	The working face of the snow plow.
Trip:	The ability of a snow plow to temporarily give way under the pressure of an obstacle. This can be accomplished by a variety of designs, often with the use of springs.
Push Frame:	The portion of the moldboard support frame that remains rigidly secured to the machine hook-up
Swing Frame:	The portion of the moldboard support frame that follows the moldboard throughout its range of motion
Push Plate:	The attachment point at the rear of the push frame that attaches to the plow harness. This plate oscillates to follow the crown of the road.
Wear Shoes:	The replaceable runners located under the cutting edge. Properly adjusted wear shoes protect the push frame from abrasion and extend cutting edge life.
Down Pressure Arms	A standard feature of Craig Reversible Snow Plows which allows moderate pressure to be applied to the cutting edge when plowing in heavy snow.

ACCESSORIES AND OPTIONS

Rubber Deflector Kit:	Includes a twelve-inch-wide, half-inch thick heavy-duty rubber deflector and all necessary mounting hardware. Attaches to the top of the Moldboard.
Carbide Edge:	Superior wear resistance intended for short passes such as ramp clearing. Prolonged passes can generate heat and premature wear.
High Visibility Kit:	Includes two high visibility flag sticks, two square feet of conspicuity tape and all necessary mounting hardware.
Cast Curb Shoe:	Replaceable item that protects the plow from curbs. Install at one or both ends of the cutting edge.
Salt Saver Edge:	Craig's live edge option that hugs the profile of the road for better cleaner roads, reducing the amount of salt/sand needed for snowy roads. Features a forged steel edge with carbide inserts. Helps to reduce in-cab noise and vibration.
Trip edge:	An edge assembly that has its own set of springs at the base of the moldboard that allows just the edge to trip over an obstacle.

INSTALLATION INSTRUCTIONS

INSTALLATION AND REMOVAL

Read all safety precautions before installing the attachment. Refer to the machine's owner's manual for additional information. If a coupler system is involved ensure that the coupler is working properly before use. In addition, refer to the manufacturer for the coupler owner's manual to familiarize yourself with its proper procedures and operations. Craig coupler owner's manuals can be found by going to:

www.craigattachments.com/technicaldocuments

HYDRAULICS

There is a cushion valve on the push frame of the 0600 series plow. This valve is intended to relieve the cylinders when pressures spike from hitting obstructions such as curbs or frozen banks, thus "cushioning" the plow upon impact. Craig recommends setting the relief on the machine's 3rd spool to 200psi less than the cushion valve.

NOTICE This attachment must be connected to a valve section that is set no higher than 1600 psi. This will ensure that the hydraulic circuit will always relieve before damaging the plow. To set the flow rate, start with a low flow rate and adjust until the extend time is about 6 seconds.

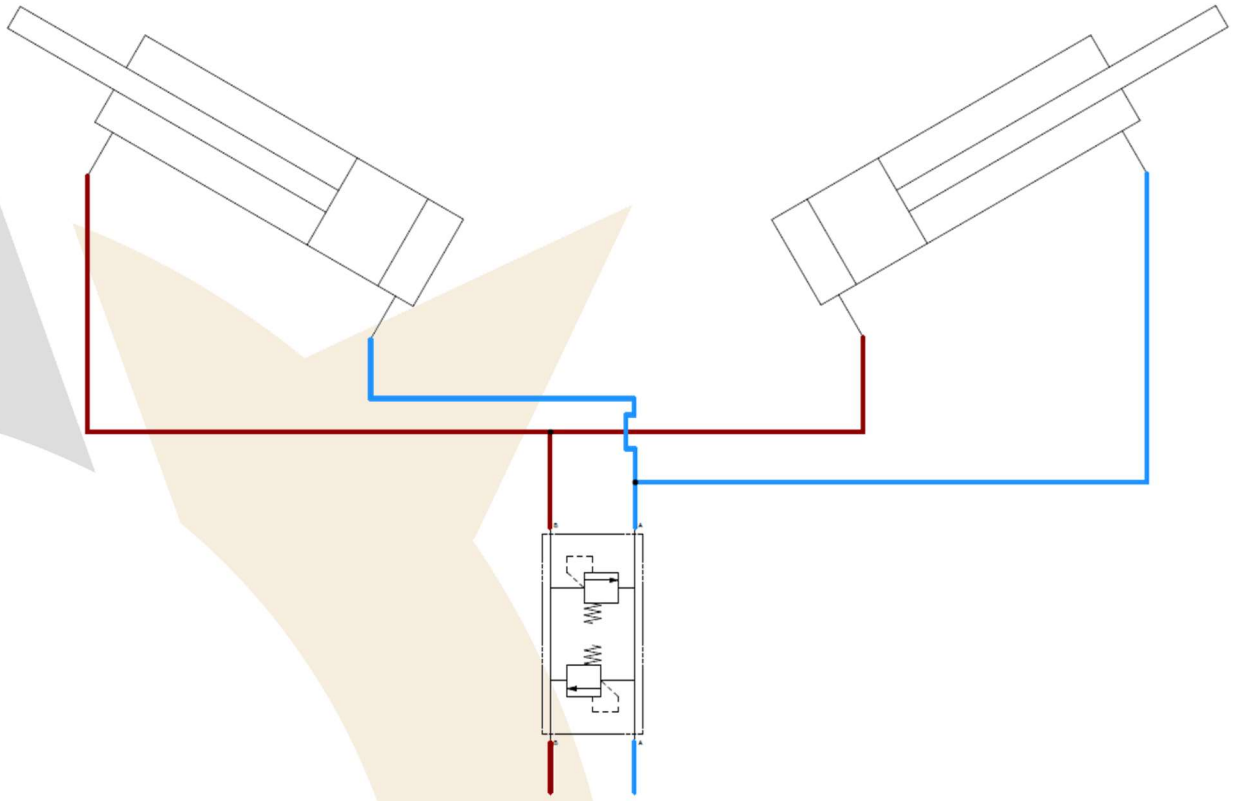

SETTING WEAR SHOES

The wear shoes on your reversible plow are meant to take most of the weight of the plow and protect the bottom of the plow from wear. Craig recommends setting shoe height with the plow and machine on a flat shop floor. This way shoes can be set so they contact the ground slightly before the cutting edge. This will ensure that the shoes take most of the load and wear when compared to the moldboard cutting edge.

Often reversible plows are operated with the machine boom arms in float position on loaders and backhoes. Craig recommends setting wear shoe height with the push plate pins at a height of around 14-16" from the ground. This helps to ensure that the push frame of the plow and machine coupler do not drag on the ground during use.

NOTICE Failing to set the wear shoes and boom arms in a position that keeps the push frame and machine coupler from dragging on the ground will result in damage to the machine's coupler and push frame and will void all warranty.

OPERATION INSTRUCTIONS

INTENDED USE

Craig 0600 Reversible Plows are intended for low to mid speed road use under harsh conditions. Use outside of this scope is considered misuse.

WARNING Operator and maintenance personnel must be trained and familiar with the entire manual. The operator is responsible for safety. If there is any portion of this manual or function you do not understand, contact your local authorized dealer, or Craig Manufacturing Ltd.

PRIOR TO OPERATION

- Inspect machine and all equipment prior to use. Refer to "MAINTENANCE" section and perform all periodic inspections and maintenance.
- Ensure operator cab is clean and free of distracting objects or spills.
- No passengers allowed.
- Make sure all levers, pedals, switches, or other controls are in neutral position prior to starting the engine.

OPERATION

- The operator should be familiar with all controls. Refer to the machine owner's manual for further operation instructions.

NOTICE Ensure reversible plow is operated level. Premature wear on the push frame and coupler can occur if set too low.

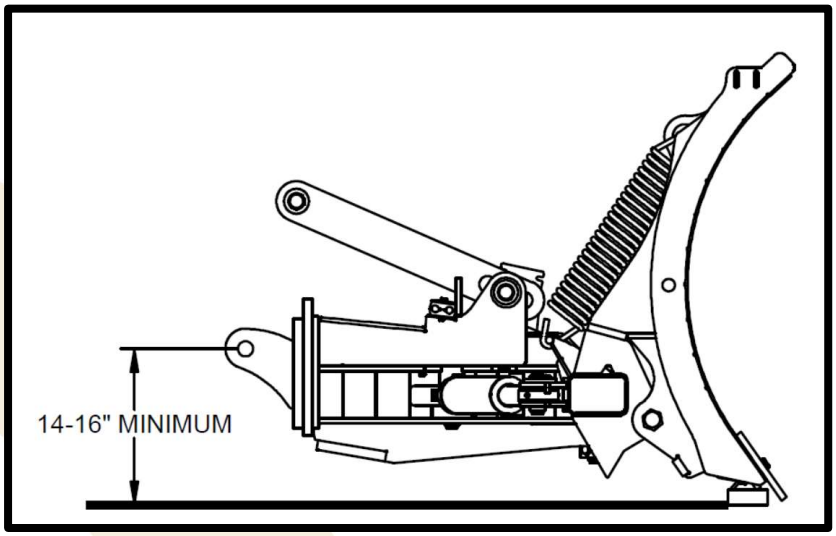

TRIP SPRINGS

Most Craig reversible plows come standard with four trip springs (for trip moldboard plows). Operating a plow with a broken trip spring will overload the other springs and result in premature failure or stretching of the springs.

OPERATION INSTRUCTIONS

MECHANICAL FLOAT

Adjust the hookup angle so that down pressure arm slot is centered on the pin to allow the plow to "float".

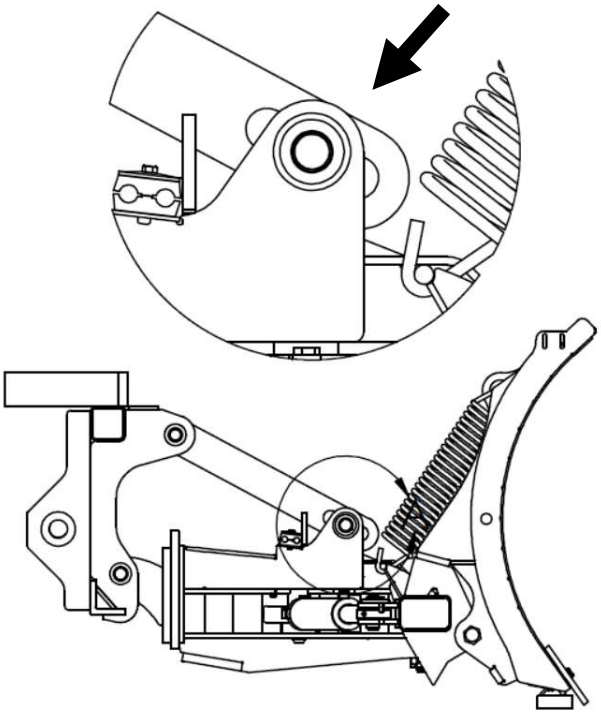

PLOWING SNOW

Plowing snow on road systems can be dangerous. Drive defensively and adjust your plowing speed to meet changing conditions. Passenger vehicles often do not have the same traction as your machine. Assume that their stopping and steering capabilities will be reduced.

While operating your snow plow be aware of obstacles that may catch your moldboard such as bridge joints, manholes, railroad tracks, and broken pavement.

HARD PACK SNOW

When plowing hard pack snow, adjust your down pressure just enough so that the plow is not digging in and tripping. This is the safe plowing setting ensuring that your machine will not be unexpectedly jarred by the snow while also retaining effective plowing contact.

OPERATION INSTRUCTIONS

DEEP SNOW

Deep snow requires plowing at lower speeds using a lower gear to push the snow plow. Angle the plow to its full extent in order to cut with less resistance. If the snow is too deep you may need to use a Craig Vee Plow to open the initial windrows which can then be plowed by conventional one-way or reversible moldboards.

NOTICE NEVER ram snow with a reversible plow. DOING SO MAY VOID YOUR WARRANTY.

HIGH SPEED PLOWING

High Speed Plowing should be done with the moldboard angled at half of its full movement and without down pressure. This allows the cylinders and cushion valve to give when hitting obstacles. Applying down pressure in a high-speed scenario could cause the machine to lurch in the direction of the plow upon encountering an obstacle.

ICE

NOTICE Your Craig snow plow is not designed to lift ice. Use chemical ice-melt products to deal with these conditions. Applying too much down pressure in an attempt to lift ice may damage the pivot point between your swing frame and push frame. THIS TYPE OF DAMAGE IS NOT COVERED UNDER WARRANTY

BACKING UP

NOTICE ALWAYS lift your plow from the ground before backing up. Your Craig snow plow is not designed for back dragging. DOING SO MAY VOID YOUR WARRANTY.

TROUBLESHOOTING

Problem	Possible Cause	Remedy
Cracks in steel structure or weld	Overloading or side loading	Immediately stop use and contact Craig Tech Support at 1-800-565-5007
Cylinder is slow or fails to actuate	Leaking hose or fittings	Check for pinched hose or damaged fittings. Refer to safety instructions for proper procedure to check for leaks.
	Insufficient hydraulic flow	Adjust flow to achieve about 6 seconds extend time.
Excessive wear on pins	Lack of grease	Ensure all pins are greased regularly. Replace any worn parts.

MAINTENANCE

GENERAL INFORMATION

It is the operator's responsibility to inspect all equipment daily. Regular maintenance is necessary to prolong the life of the equipment, avoid costly shutdowns, and keep things running optimally.

WARNING Operator and maintenance personnel must be trained and familiar with the entire manual. Refer to the "SAFETY INSTRUCTIONS" section and follow the "MANDATORY SHUTDOWN PROCEDURE" prior to doing any work on the machine.

PERIODIC MAINTENANCE TABLE		
Procedure	Daily	Weekly
Clean attachment of snow/debris prior to inspection, especially around cylinder.	X	
Inspect all equipment for damage, worn parts, cracked welds, etc. If a crack is found in either the steel structure or welds, the attachment must be removed from the machine and Craig Contacted immediately. *Contact Craig Tech Support (1-800-565-5007) for recommended weld procedures.*	X	
Check pins and bushings for play or wear. Replace if worn	X	
Check cutting edge for wear. When the cutting edge needs to be replaced, also replace all bolts, nuts and lock washers with new ones.	X	
Check trip springs and linkage and that the bolts are tight, not missing or worn. Adjust the spring if it is loose by screwing the locknuts back tight against the spring. This complete assembly should be greased daily, especially the shaft that is inside the spring. Replace the spring if it is broken or cannot be tightened anymore by the locknuts.	X	
Hardware - replace missing or damaged bolts/fasteners, tighten as necessary	X	
Check for kinked/pinched or worn hoses. *Repair/reroute as necessary*	X	
Hoses - check for leaks. *Repair/tighten as necessary*	X	
Decals - replace worn or missing	X	
Lubricate grease points	X	
Ensure daily checks are completed		X

NOTICE DO NOT weld the trip linkage solid or inhibit the movement of the trip linkage. DO NOT remove the wear shoes. Severe damage or injury may occur.

MAINTENANCE

LUBRICATION

The most crucial maintenance tip required for an 0600 is greasing. Greasing the pivot points on your attachment daily with use will help to ensure smooth operation over its lifetime. A well-greased point keeps the metal-to-metal contact to a minimum and with it minimizes wear. A proper greasing technique involves pumping grease onto the fitting until you can visibly see the grease coming out around the joint. It is important to have grease come out into the gap in the joint because it protects the area surrounding from dirt getting in and causing abrasive wear on the metal surfaces in the joint.

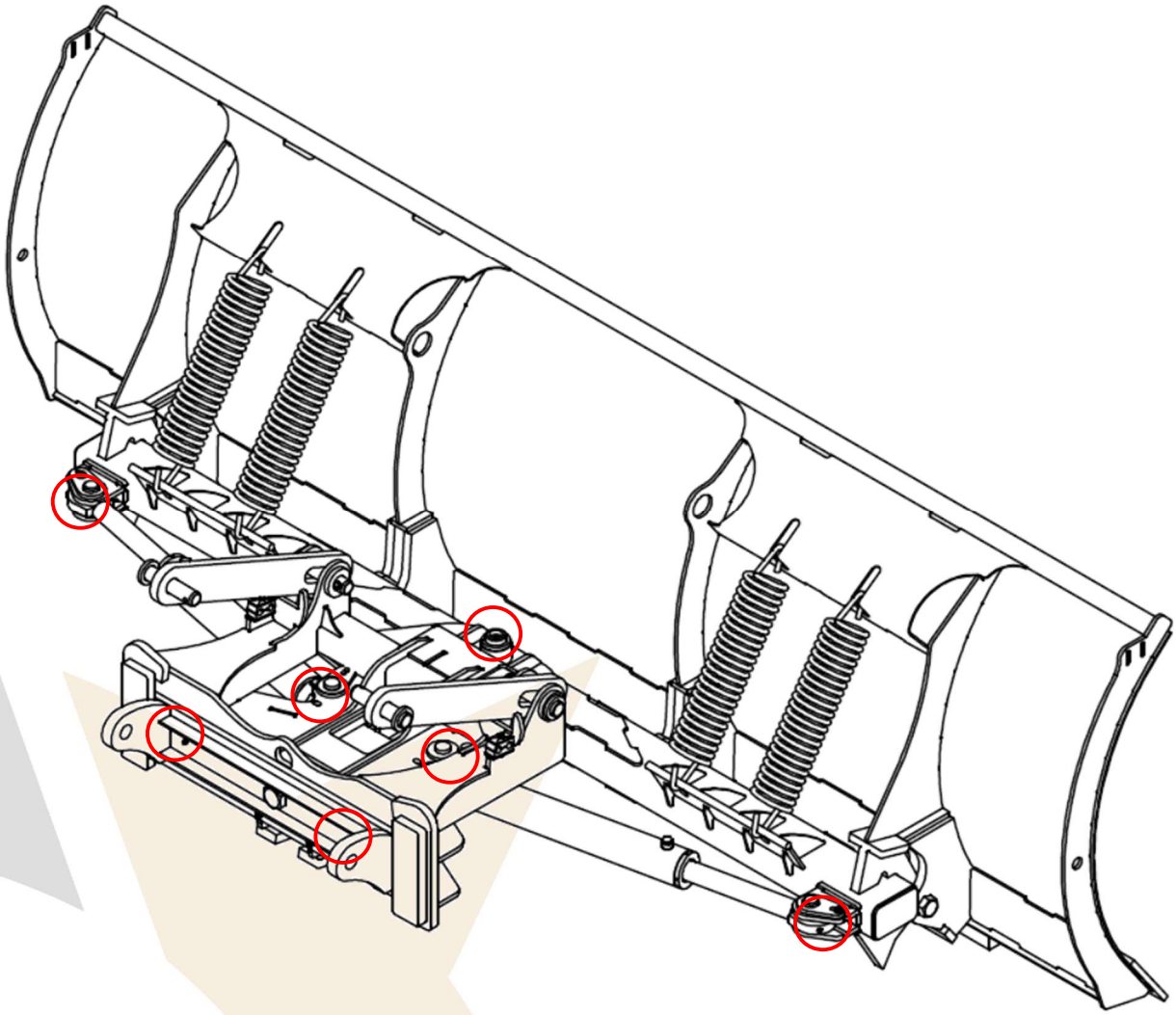

0600 Reversible plows have several grease points. The Push Plate, where the plow attaches to your machine, contains two grease fittings, each cylinder has 2 grease fittings (one on each lug), and the main hinge pin has a grease fitting on one of its ends. If a trip edge is installed, the complete trip spring assembly should be greased daily, especially the shaft that is inside the spring.

MAINTENANCE

TECHNICAL SUPPORT

If you have followed the maintenance instructions contained in this manual, you should have years of trouble-free operation from your Craig attachment. Should you encounter any issue or have any questions about your attachment please contact us at 1-800-565-5007 and ask for technical support.

READING PRODUCT TAG

Craig Manufacturing Ltd. stamps a blue serial tag onto every attachment. The tag is often located on the rear of the attachment in the upper left corner. The information contained on this tag will be required for parts and support. Craig serial numbers begin with a "T" followed by the year then month of construction. For example, T1203 would denote the year 2012 and 03 the month of March.

STORAGE

WARNING Disconnection from the machine and installation must be done by a qualified technician. NEVER trust that the hydraulic system will not fail. ALWAYS lower booms and attachments to the ground before leaving the cab or operator's station. DO NOT work under or around attachments or heavy items not supported by stands, blocks or safety chains. Furthermore, it is important to use chains and/or stands to steady unstable attachments or heavy components that may fall if being disconnected.

END OF SEASON

- Thoroughly clean the snow plow of salt and grime.
- Store your plow off the ground. Laying the plow on a simple set of 4" x 4" blocks can keep your plow from sitting in water or damp ground.
- Inspect for damage and order any replacement parts.
- Tighten all hardware and make sure there are no loose connections.
- Paint all replacement parts.
- Paint any bare surfaces to prevent rust.
- Lubricate all grease points. Refer to maintenance section.
- Apply penetrating oil/rust inhibitor to trip assembly.
- Coat exposed portions of cylinder rods with grease.
- Seal hydraulic system from contaminants.
- Secure all hoses in a manner that prevents potential damage during transport.
- Replace any illegible or missing decals.
- Store unit inside a clean, dry area to prolong life.

BEGINNING OF SEASON

- Review entire operator's manual.
- Clean equipment
- Install any replacement parts.
- Secure all fasteners.
- Check hydraulic hoses for damage and replace as necessary.
- Replace missing or illegible decals.
- Refer to installation section for important information.
- Fully understand this manual and the prime mover operator's manual and take proper precautions prior to testing.

SPECIFICATIONS

TORQUE CHART - COURSE THREAD

		SAE J429 Grade 5				SAE J429 Grade 8			
			Tightening Torque (ft-lbs)				Tightening Torque (ft-lbs)		
Nominal Dia. (in.)	Threads per inch	Clamp Load (lbs.)	Lubricated K = 0.15	Thread-locker K = 0.17	Zinc & Dry K = 0.20	Clamp Load (lbs.)	Lubricated K = 0.15	Thread-locker K = 0.17	Zinc & Dry K = 0.20
1/4	20	2029	6.3	7.2	8.5	2864	9.0	10.1	11.9
5/16	18	3342	13	15	17	4719	18	21	25
3/8	16	4940	23	26	31	6974	33	37	44
7/16	14	6777	37	42	49	9568	52	59	70
1/2	13	9046	57	64	75	12771	80	90	106
9/16	12	11599	82	92	109	16375	115	130	154
5/8	11	14408	113	128	150	20340	159	180	212
3/4	10	21322	200	227	267	30101	282	320	376
7/8	9	29436	322	365	429	41556	455	515	606
1	8	38616	483	547	644	54517	681	772	909
1 1/4	7	53786	840	952	1121	87220	1363	1545	1817
1 3/8	6	64096	1102	1249	1469	103939	1786	2025	2382
1 1/2	6	77991	1462	1657	1950	126473	2371	2688	3162

Refer to serial tag on the attachment for identification. NOTE: your serial tag may not appear exactly as shown below.

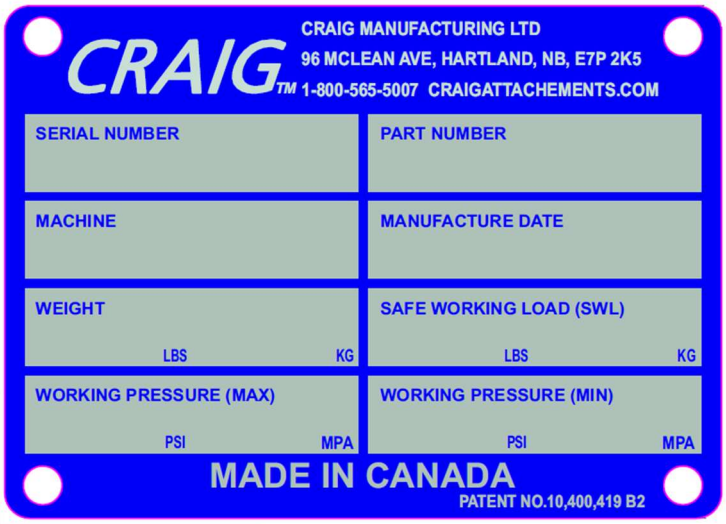

PARTS

To provide you with the most UP-TO-DATE part information, parts diagrams for this attachment have been moved to our Portal website. Please use these diagrams and parts lists to locate your replacement parts.

https://portal.craigattachments.com/

When servicing your attachment, remember to use only original manufacturer replacement parts. Substitute parts may not meet the standards required for safe and dependable operation.

To facilitate parts ordering when contacting any of our branches, please have the product serial number or product part number for your attachment ready to ensure that you receive the correct parts for your attachment.

The product serial number and product part number for your attachment should be recorded in the space provided in this manual. This information may be obtained from the serial number identification plate located on your attachment.

NOTE: Most parts orders (in stock) received by 12:00pm (Atlantic Standard Time) can be shipped the same day or following business day.

WARRANTY

To provide you with the most UP-TO-DATE warranty information, warranty procedures, technical documents, product terms, and product registration, please go to our website at:

https://www.craigattachments.com/

NOTES

NOTES

CRAIG™
ENGINEERING. MANUFACTURING. SERVICE.

HARTLAND BRANCH
96 McLean Avenue
Hartland, New Brunswick
E7P 2K5 Canada

CAMBRIDGE BRANCH
315 Thompson Drive
Cambridge, Ontario
N1T 2B3 Canada

BLACKFALDS BRANCH
88 27323 TWP Rd 394
Lacombe County, Alberta
T4M 0S1 Canada

LAWRENCEBURG BRANCH
408 Commerce Way
Ethridge, Tennessee
38456 USA

1-800-565-5007 • WWW.CRAIGATTACHMENTS.COM