CRAIG™
ENGINEERING. MANUFACTURING. SERVICE.

# WL-CEB

## CRAIG EJECTOR BUCKET

**OWNER'S MANUAL**

Important safety and operation instructions inside

Read thoroughly before operating

**CRAIG MANUFACTURING LTD.**
96 Mclean Ave
Hartland, New Brunswick
E7P 2K5 Canada

Tel: 1-506-375-4493
Toll Free: 1-800-565-5007

Email: sales@craigattachments.com
Website: www.craigattachments.com

# TABLE OF CONTENTS

PREFACE

INTRODUCTION

SAFETY INSTRUCTIONS

DECALS

INSTALLATION INSTRUCTIONS

OPERATION INSTRUCTIONS

TROUBLESHOOTING

MAINTENANCE

STORAGE

SPECIFICATIONS

PARTS

# PREFACE

Congratulations on the purchase of your new Craig Manufacturing Ltd. product. This manual provides safety, operation, and maintenance information. To keep your product in good condition, please read this manual and follow all recommendations. Failure to do so may invalidate your warranty.

When parts or service are necessary contact Craig at 1-800-565-5007 for genuine Craig Parts. Before using your product, make sure your machine is equipped with all the OEM recommended requirements for your product application.

**CRAIG FACTORY ORIGINAL PARTS**

CRAIG
CUSTOMER SUPPORT CENTER
1-800-565-5007

The best way to ensure equipment reliability is to use only genuine Craig Manufacturing Ltd. Factory Original Parts. Our parts department can help you not only find the right part for your application but also offers advice and support for the repair. Using aftermarket non-approved parts can alter your product's performance characteristics and may affect your warranty.

To help ensure that correct parts are ordered, please record the serial number of your product. Over time serial tags can become tarnished or difficult to read. Please supply this serial number to your dealership when ordering parts and it will ensure the correct part gets ordered.

Serial: _____

Machine: _____

Model: _____

In-Service Date: _____

Purchased From: _____

**Never let anyone operate this unit without reading the "SAFETY INSTRUCTIONS" and "OPERATION INSTRUCTIONS" sections of this manual.**

**NOTE:** The illustrations and data used in this manual were current (according to the information available to us) at the time of printing, however, we reserve the right to redesign and change the attachment as may be necessary without notification.

# INTRODUCTION

As the new owner and/or operator of the Craig ejector bucket we require you take the time to read this Operator's Manual carefully before commencing work.

## FOLLOW THE SAFETY INSTRUCTIONS

- Carefully read all the safety information contained in this manual.
- Make sure all safety decals are securely fitted in the cab.
- Immediately replace any safety decals that are missing or damaged.
- Before starting work make sure you have a copy of this Operator's Manual in the cab and are familiar with all the safety procedures and instructions contained in this manual.

## INFORMATION FOR THE USER

The user of the Craig attachment is obliged to ensure that the equipment is always in safe working order in accordance with accident prevention regulations, Occupational Safety and Health regulations or any other official instructions.

## ENHANCED WARRANTY FOR ELIGIBLE PRODUCTS

Craig offers an enhanced warranty from 12 months (or 2,000 hours which ever comes first) to 36 months (or 6,000 hours) for **eligible products**. To take advantage of this enhanced warranty the eligible product must be registered within 30 days of receiving the product. You can register your product at the following website:

https://www.craigattachments.com/product-registration/

Refer to the contents of this manual to remedy faults and contact Craig at 1-800-565-5007 if you require assistance. Notice that unauthorized modifications to this equipment is prohibited and will void warranty.

# SAFETY INSTRUCTIONS

This is an alert symbol. It indicates an imminent or potential hazard. Signal words "DANGER", "WARNING", and "CAUTION" qualify this alert symbol into the following categories:

| | |
|---|---|
| DANGER | Hazardous situation which, if not avoided, WILL result in death or serious injury |
| WARNING | Hazardous situation which, if not avoided, COULD result in death or serious injury |
| CAUTION | Hazardous situation which, if not avoided, could result in minor or moderate injury |

The signal word "***NOTICE***" indicates important information that, if not followed, could result in severe damage to equipment or property.

**SAFETY PRECAUTIONS BEFORE OPERATION**

The primary responsibility for safety with this product falls to the operator. Make sure the product is operated only by trained individuals that have read and understood this manual. If there is any portion of this manual or function you do not understand, contact your local authorized dealer, or Craig Manufacturing Ltd. Keep this manual available for reference.

## WARNING!

**Read Manual Prior to Installation, Operation or Maintenance**
Improper installation, operation, and/or maintenance of your Craig Manufacturing Ltd. attachments can cause death or bodily injury, property damage, or damage to your equipment. Read and understand this manual and all labels before operating or doing any work on the equipment. NEVER allow anyone to operate this unit without first reading the safety and operating instructions. Failure to do so may affect your warranty.

Read your machines owner's manual and always be aware of capacities and heights of all materials moved are within the machines stated operational capacity.

**Understand All Safety Decals and Statements**
Become familiar with and inform users about all safety decals and safety statements in all manuals and on the back of the attachment prior to operating or working on this product. Know and follow all national occupational safety regulations, local laws, and other professional guidelines. As well as all good work practices when working on or with this product. Know your equipment capabilities and operations.

Worn, damaged, or illegible safety decals must be replaced. New safety decals can be ordered from your local dealer.

# SAFETY INSTRUCTIONS

## WARNING!

Inspect all equipment prior to operating and ensure all components are in proper working order. Check hardware for tightness and that all guards and safety devices are in place. Know all decals and check for legibility. Replace anything damaged, worn or missing. Make sure operator cab is clean and free of any distracting objects or spills.

Be aware of overhead or buried utilities. Contact your local utilities to locate any underground lines or other hazards.

Make sure all levers, pedals, switches, or other controls are in neutral position prior to starting the engine.

Before exiting the machine, for any reason, follow the "MANDATORY SHUT DOWN PROCEDURE".

**MANDATORY SHUT DOWN PROCEDURE**

1. Stop the machine on level ground.
2. Lower the attachment to the ground.
3. Move throttle to the idle position.
4. Disengage all power to the attachment.
5. Apply the brakes.
6. Turn off the engine and remove the key.

Never use your attachment as a work platform or personnel carrier

Never lift, move, or swing an attachment over anyone.

Do not use attachment for lifting materials outside of its purpose. This attachment is not a lifting device unless approved for your jurisdiction.

Never perform any work on the attachment unless you are authorized and qualified to do so. Work in pairs. Always read the operator service manuals before any repair is made. Wear proper PPE.

**Personal Protective Equipment (PPE) Required**
Remove ignition key and immobilize the machine during installation, inspection, or service. Always follow safe work practices when installing, servicing, or inspecting your product by wearing only snug-fitting clothing, removing jewelry, and securing long hair. Wear safety goggles to protect your eyes from hydraulic fluid, sparks, dirt, and dust. Always have a fire extinguisher rated BC on hand for flammable liquid and electrical fires. Lastly, always lift with your legs, and use lifting equipment when applicable.

# SAFETY INSTRUCTIONS

## WARNING!

**CRUSH HAZARD – DO NOT work under or around raised arm or attachment.**
Lower or Support Unstable/Raised Equipment. NEVER trust that the hydraulic system will not fail. ALWAYS lower booms and attachments to the ground before leaving the cab or operator's station. DO NOT work under or around attachments or heavy items not supported by stands, blocks or safety chains. Furthermore, it is important to use chains and/or stands to steady unstable attachments or heavy components that may fall if being disconnected.

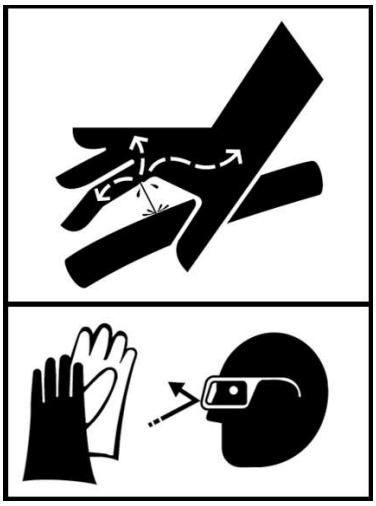

**Skin Injection Hazard**

- Relieve pressure before working on system
- Wear gloves & eye protection
- Detect leaks with wood or cardboard
- NEVER use hands to detect leaks
- Fluid injected in skin must be surgically removed

**Hydraulic Safety**

Always inspect hydraulic components before operating your product. Replace any damaged or worn parts immediately. Temperature changes can change hydraulic pressure, which allow the cylinders to drop unexpectedly, causing injury or damaging hydraulic components. Hydraulic fluid under pressure can cause bodily harm. If you suspect a hydraulic leak note the following:

- The high pressure of the hydraulic lines can cause leaks that can puncture flesh. Therefore, it is important to keep uncovered body parts such as face, eyes, and arms away from a suspected leak.
- Flesh injected with hydraulic fluid may develop gangrene or other permanent disabilities. If injured by leaking hydraulic fluid, see a doctor immediately. Hydraulic fluid could have injected into the wound, and it may not be known.
- Before disconnecting hydraulic lines, wait until the fluid cools down. Hot hydraulic fluid can cause severe burns.
- Always wear protective clothing, such as gloves and safety glasses, and use a piece of cardboard when searching for hydraulic leaks. DO NOT USE YOUR HANDS.

Never make hydraulic repairs while the system is under pressure. Serious personal injury or death could occur. Never work under a raised attachment. Check the weight of the attachment and use handling equipment of sufficient capacity.
Always tag "DO NOT OPERATE" until all problems are corrected.

# SAFETY INSTRUCTIONS

## WARNING!

Lubricants may contain toxins, cause adverse health effects or be hazardous to the environment. Ensure environmentally safe disposal. Observe all safety labels.

**Do Not Alter Attachment**

Any alterations to this product could affect the safety and performance of the attachment. When making repairs, use only Craig Manufacturing Ltd. parts, and follow the provided procedures. If the parts and procedures are not used the warranty is void and any alterations may cause the attachment to become unsafe. Any modifications must be authorized in writing by Craig Manufacturing Ltd.

**Safe Transport**

- Travel only with the attachment in a safe transport position to prevent uncontrolled movement. Drive slowly over rough terrain and slopes.
- When transporting on a trailer, secure attachment using tie downs in recommended locations to maintain attachment stability.
- When driving on public roads use safety lights, reflectors, and slow-moving vehicle signs to prevent accidents. Check local government regulations that may affect you.
- Do not drive close to ditches or excavations, because a cave-in could occur.

**Keep attachment close to the ground when engaging/disengaging attachments!**

It is possible to drop an attachment during engaging and disengaging procedures. Therefore, it is best to make sure the attachment is kept close to the ground. Visually check that the attachment is securely locked before operating. Follow the procedures outlined in the operation section of this manual. If coupler is not functioning properly, it must be checked/repaired by a qualified service technician prior to use. Failure to do so could result in serious injury or death.

**If attachment is loose on coupler, immediately stop use!**

If the attachment seems loose on the coupler, please immediately stop use and call Craig Technical Support at 1-800-565-5007. There could be something wrong that could affect the safety of the coupler.

# SAFETY INSTRUCTIONS

## CAUTION!

**Remove Paint Before Welding or Heating**
When paint is heated by welding, or by using a torch, hazardous fumes/dust can be generated. Therefore, it is important to do all work in a well-ventilated area and dispose of paint and solvent properly. TURN OFF ENGINE AND DISCONNECT BATTERY PRIOR TO WELDING. Refer to machine's owner's manual for procedure.

**When removing paint:**

- It is important to wear an approved respirator when sanding or grinding paint.
- If you use a paint stripper or solvent, remove the stripper with soap and water.
- Remove solvent or paint stripper containers and other flammable material from the welding/heating area.
- Allow fumes to disperse at least 15 minutes before welding or heating.

# DECALS

| Item | Part # | Description | Quantity |
|---|---|---|---|
| 1 | 164958-XX | Decal, pinch point hazard | 2 |
| 2 | 164953-XX | Decal, grease frequently | 2 |
| 3 | 22558-XX | Decal, pin bosses machined | 1 |
| 4 | 159025-XX | Decal, pressure setting | 1 |
| 5 | 168920-XX | Decal, keep area free of debris | 2 |

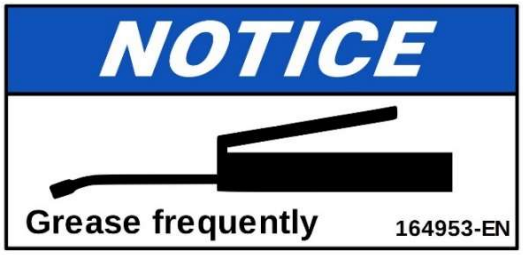

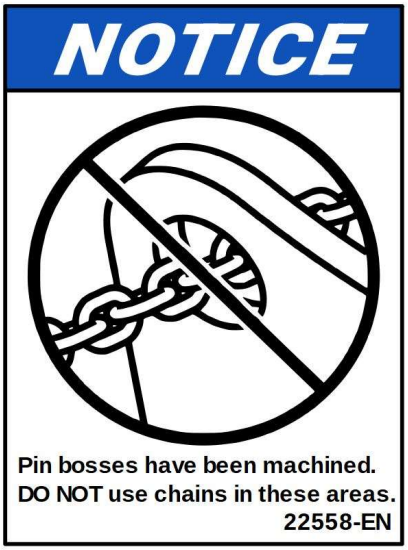

# DECALS

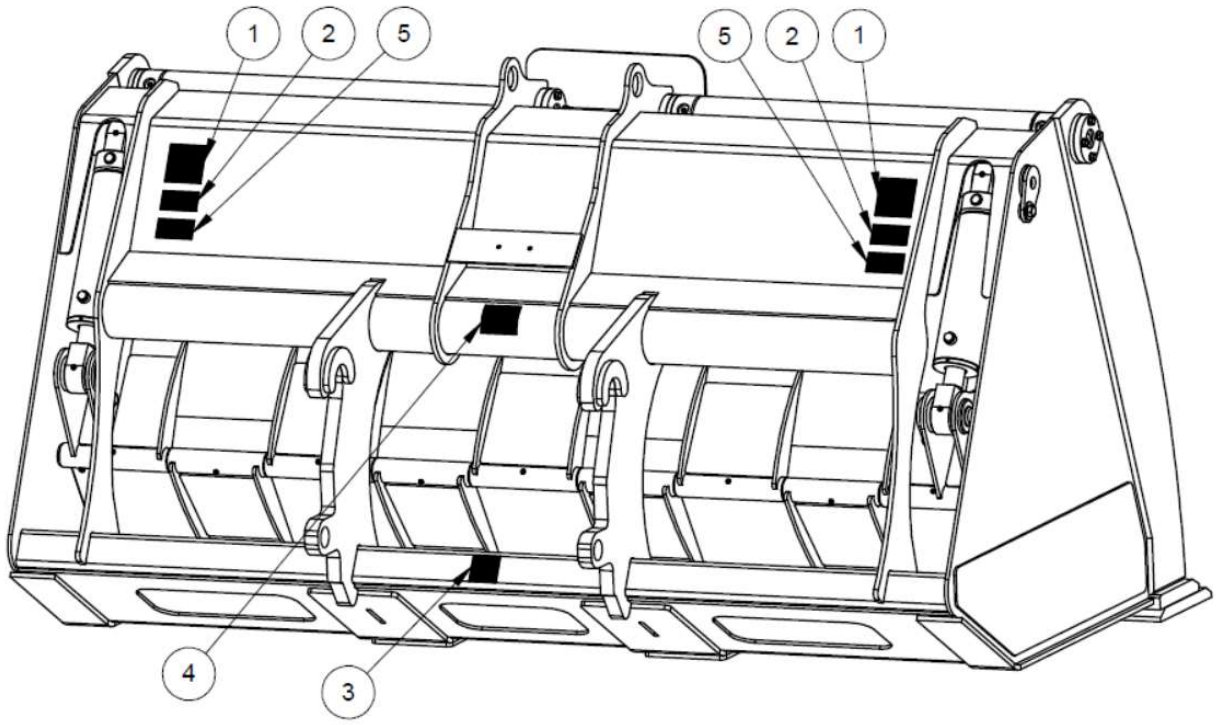


***NOTE:*** *YOUR PRODUCT MAY NOT APPEAR EXACTLY AS SHOWN*

# INSTALLATION INSTRUCTIONS

## NOMENCLATURE

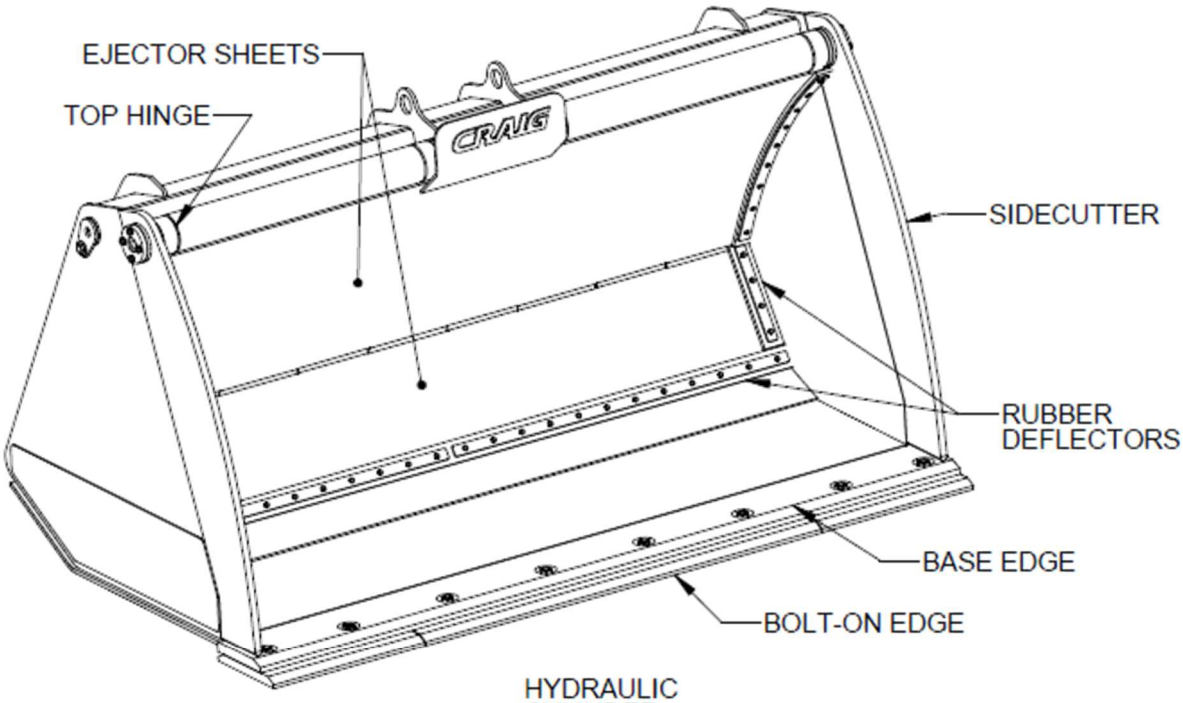


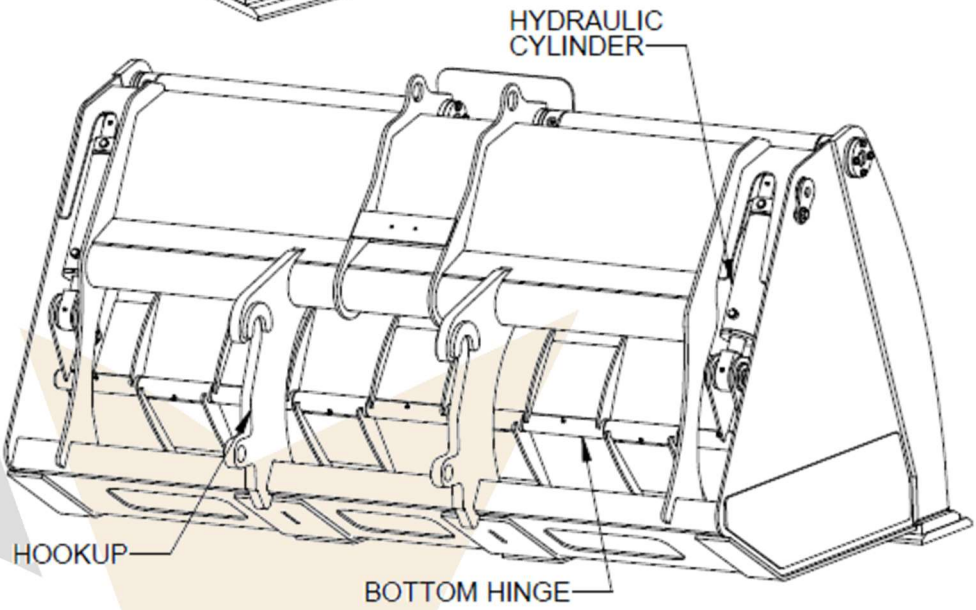


***NOTE:*** *YOUR PRODUCT MAY NOT APPEAR EXACTLY AS SHOWN*

# INSTALLATION INSTRUCTIONS

## TERMINOLOGY

| | |
|---|---|
| Cutting Edge: | The consumable wear component located on the bottom of the base edge. Cutting edge must be replaced periodically to protect the base edge. |
| Base Edge: | The bottom edge of the bucket that is made out of AR 400 to reduce wear and absorb the bucket breakout forces. |
| Sidecutter: | Similar to the base edge, it is made out of AR 400 to reduce wear and absorb the forces developed from the bucket cutting into the material. |
| Ejector Sheets: | The main sheets of the bucket that eject material. |
| Top Hinge: | The main hinge at the top of the bucket for the ejector sheets. |
| Bottom Hinge: | The hinge between the two ejector sheets. |
| Rubber Deflectors: | Rubber strips on the ejector sheets slide against the frame of the bucket to eject material. |
| Hookup: | The connection between the loader to the coupler or attachment. |
| Hydraulic Cylinder: | The ejector sheets are operated by dual hydraulic cylinders. |
| Rollback Stops: | The rollback stops are installed on attachments to stop the attachment from rolling to far back and interfering with the loader linkage or allowing the linkage to go over center. |
| Dump Stops: | The dump stops are installed on attachments to stop the attachment from dumping too far and interfering with the loader boom or allowing the linkage to go over center. |

## ACCESSORIES AND OPTIONS

| | |
|---|---|
| Serrated Edge: | A bolt-on cutting edge that is serrated |

## INSTALLATION AND REMOVAL

Read all safety precautions before installing the attachment. Refer to the machine's owner's manual for direct pin- on installation instructions. If a coupler system is involved ensure that the coupler is working properly before use. In addition, refer to the manufacturer for the coupler owner's manual to familiarize yourself with its proper procedures and operations. Craig coupler owner's manuals can be found by going to:

www.craigattachments.com/technicaldocuments

Check and/or adjust rollback and dump stops as needed before using attachment. Refer to the "MAINTENANCE" section of this manual for instructions on checking and adjusting stops.

# INSTALLATION INSTRUCTIONS

## INSTALLING ROLLBACK STOPS

**NOTICE** Some Craig products have the rollback stops shipped loose. In this event, it is important to follow this procedure for setting the rollback stops on a loader. Failure to set the stops correctly can result in premature wear and fatigue of attachment and linkage components. DO NOT operate attachment without installing rollback stops.

**WARNING** Turn off the machine during install/maintenance. Never leave equipment unattended with the engine running or with attachment in a raised position.

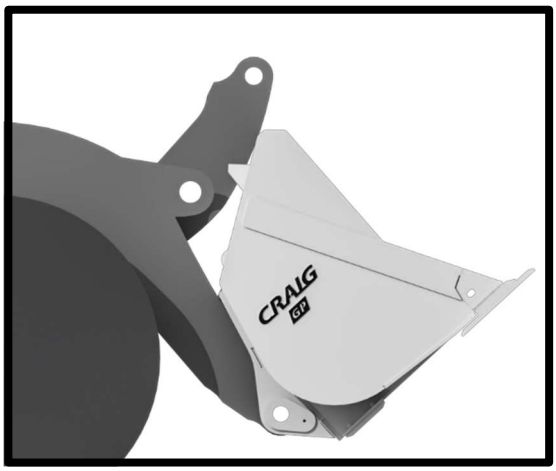


1. Install attachment to loader linkage. If unit has a quick coupler, set the stops with the attachment mounted on the coupler.
2. Tilt attachment to max rollback position.
3. You may have to lower boom arms until attachment reaches maximum rollback angle (usually at carry position). Refer to OEM specifications for correct angle.
4. Set rollback stops in position so that they clear the top boom arms by 1/16" to 1/8". Mark the position of the stops on the attachment.
5. Lower attachment to the ground and remove paint from the areas to be welded.

   **CAUTION** REMOVE PAINT BEFORE WELDING OR HEATING. When paint is heated by welding, or by using a torch, hazardous fumes/dust can be generated. Therefore, it is important to do all work in a well-ventilated area and dispose of paint and solvent properly. TURN OFF ENGINE AND DISCONNECT BATTERY PRIOR TO WELDING. Refer to machine's owner's manual for procedure.
6. Repeat steps 2 and 3. Then, hold stops in position and tack weld in place.
7. Lower attachment to the ground and repeat steps 2 and 3 - check clearance. NOTE: Some manufacturers specify interference up to 1/4".
8. Finish welding stops in position and allow weld to cool. Lastly, touch up with paint.

# INSTALLATION INSTRUCTIONS

## INSTALLING DUMP STOPS

**NOTICE** Some Craig products have the dump stops shipped loose. In this event, it is important to follow this procedure for setting the dump stops on a loader. Failure to set the stops correctly can result in premature wear and fatigue of attachment and linkage components. DO NOT operate attachment without installing dump stops.

**WARNING** Turn Off the Machine During Install/Maintenance Never leave equipment unattended with the engine running or with attachment in a raised position.

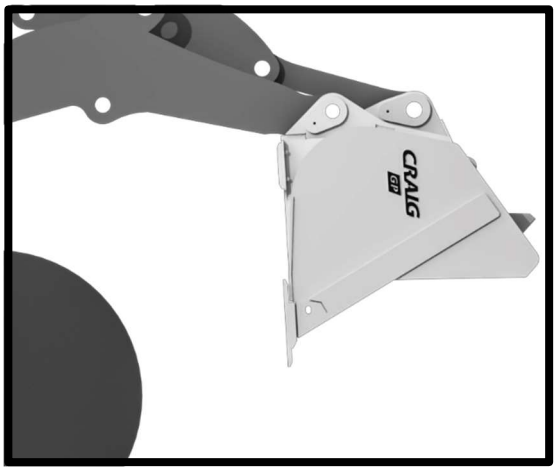


1. Install attachment to loader linkage. If unit has a quick coupler, set the stops with the attachment mounted on the coupler.
2. Tilt attachment to max dump position.
3. Lift loader boom up to point where bell crank stop surface contacts boom torque tube stop surface (usually just before full lift). Refer to OEM specifications for correct angle.
4. Set dump stops in position so that they contact underside of boom arms. Mark the position of the stops on the attachment.
5. Lower attachment to the ground and remove paint from the areas to be welded.

   **CAUTION** REMOVE PAINT BEFORE WELDING OR HEATING. When paint is heated by welding, or by using a torch, hazardous fumes/dust can be generated. Therefore, it is important to do all work in a well-ventilated area and dispose of paint and solvent properly. TURN OFF ENGINE AND DISCONNECT BATTERY PRIOR TO WELDING. Refer to machine's owner's manual for procedure.
6. Repeat steps 2 and 3. Then, hold stops in position and tack weld in place.
7. Lift loader boom arms and repeat steps 2 and 3 and check clearance.
8. Finish welding stops in position and allow weld to cool. Lastly, touch up with paint.

## LUBRICATION

The attachment must be properly lubricated at installation. Refer to maintenance section for details.

# OPERATION INSTRUCTIONS

## INTENDED USE

Craig Ejector buckets are designed to allow for easy loading and unloading of materials where dump height clearances are a challenge. The back of the bucket is hydraulically activated and swings forward ejecting the material outwards. Allowing for controlled dumping scenarios along with reducing the need to raise the bucket up and emptying using the loader's dump/tilt cylinder function. When needed, this attachment still functions like a conventional bucket. The weight of the attachment and density of working material must be appropriate for the machine. The weight the coupler must be considered when evaluating capacity. Use outside of this scope is considered misuse.

## OPERATING THE ATTACHMENT

Read all safety precautions before operating the coupler. Refer to the machine's owner's manual for further operation instruction.

**WARNING** Since the ejector bucket lifts the load higher up, the chance of tipping the loader sideways is much greater. Make sure the loader is on a level surface and pay attention when dumping to make sure the loader is stable.

## TRANSPORTING

Follow all local government regulations that may apply along with recommended tie down points and any equipment safety precautions at the front of this handbook when transporting your attachment.

## HYDRAULICS

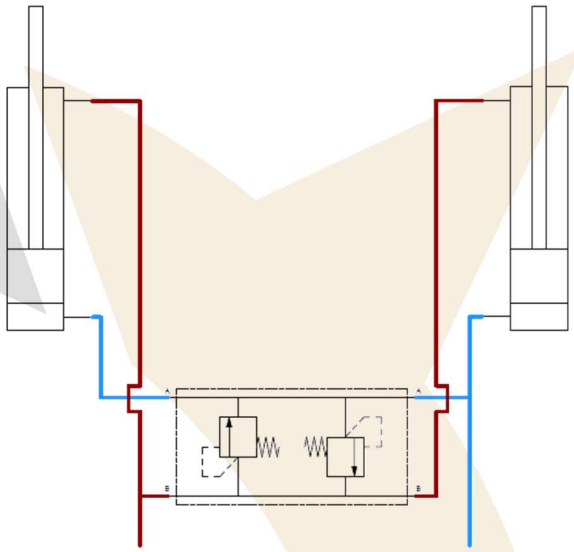

**NOTICE** Craig Ejector buckets are intended to run on 2500 psi hydraulic pressure. Improper pressure setting can cause damage to the attachment and void warranty. To set the flow rate, start at a low flow rate and increase to get the desired ejection time. Excessive speeds could damage attachment and void warranty.

# TROUBLESHOOTING

| Problem | Possible Cause | Remedy |
|---|---|---|
| Attachment is loose on coupler | Pins or bushings worn | Replace if worn |
| | Hookup mating surfaces worn | Contact Craig Tech Support at 1-800-565-5007 |
| | Pins not fully engaged due to misalignment | Ensure coupler can align properly with hookup. The hookup stops may need to be adjusted (see "INSTALLATION INSTRUCTIONS" section. DO NOT modify stop surface of coupler. |
| Premature wear of attachment or linkage | Dump stops or Rollback stops not set correctly | Refer to "INSTALLATION INSTRUCTIONS" section for setting dump and rollback stops. |
| Linkage going over center | Dump stops not set correctly | Refer to "INSTALLATION INSTRUCTIONS" section for setting dump stops. |
| Cracks in steel structure or weld | Overloading | Immediately stop use and contact Craig Tech Support at 1-800-565-5007 |
| Cylinder is slow or fails to actuate | Leaking hose or fittings | Check for pinched hose or damaged fittings. Refer to safety instructions for proper procedure to check for leaks. |
| | Insufficient hydraulic flow | Increase flow rate to an appropriate speed. |
| Excessive wear on pins | Lack of grease | Ensure all pins are greased regularly. Replace any worn parts. |

# MAINTENANCE

## GENERAL INFORMATION

It is the operator's responsibility to inspect all equipment daily. Regular maintenance is necessary to prolong the life of the equipment, avoid costly shutdowns, and keep things running optimally.

**WARNING** Operator and maintenance personnel must be trained and familiar with the entire manual. Refer to the "SAFETY INSTRUCTIONS" section and follow the "MANDATORY SHUTDOWN PROCEDURE" prior to doing any work on the machine.

| PERIODIC MAINTENANCE TABLE | | |
|---|---|---|
| Procedure | Daily | Weekly |
| Inspect all equipment for damage, worn parts, cracked welds, etc. If a crack is found in either the steel structure or welds, the attachment must be removed from the machine and Craig Contacted immediately. *Contact Craig Tech Support (1-800-565-5007) for recommended weld procedures.* | X | |
| Check pins and bushings for play or wear. *Replace if worn.* | X | |
| Check cutting edge for wear. When the cutting edge needs to be replaced, also replace all bolts, nuts and lock washers with new ones. | X | |
| Hardware - replace missing or damaged bolts/fasteners, tighten as necessary | X | |
| Check for kinked/pinched or worn hoses. *Repair/reroute as necessary* | X | |
| Hoses - check for leaks. *Repair/tighten as necessary* | X | |
| Decals - replace worn or missing | X | |
| Lubricate grease points. *See following pages.* | X | |
| Inspect hookup. Ensure there are no cracks, holes, or any other deformations in the hooks. *Contact Craig if any are found.* | X | |
| Inspect rollback and dump stops. *See following pages.* | | X |
| Check base edge and wear pads or any wear components for the attachment. *Replace if thinning.* | | X |

# MAINTENANCE

## CHECKING ROLLBACK STOPS

1. Park the machine on a firm, level, surface.
2. Tilt attachment to max rollback position.
3. Lower boom arms until attachment reaches maximum rollback angle (usually at carry position). Refer to OEM specifications for correct angle. *If the angle is not correct, then the stops will have to be adjusted to ensure performance is not affected.*

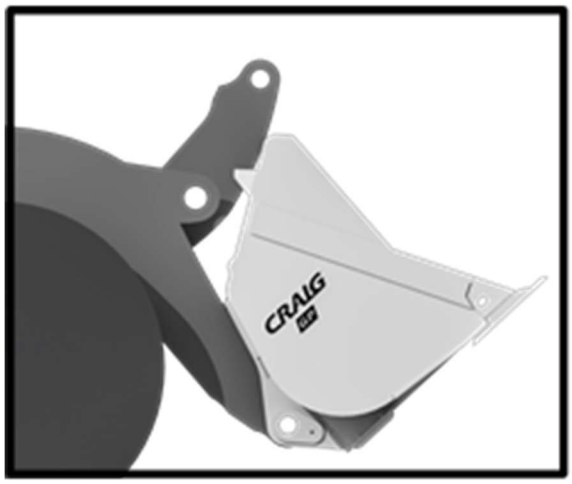

## CHECKING DUMP STOPS

1. Park the machine on a firm, level, surface.
2. Tilt attachment to max dump position.
3. Lift loader boom up to point where bell crank stop surface contacts boom torque tube stop surface (usually just before full lift). Refer to OEM specifications for correct angle. *If the angle is not correct, then the stops will have to be adjusted to ensure performance is not affected.*

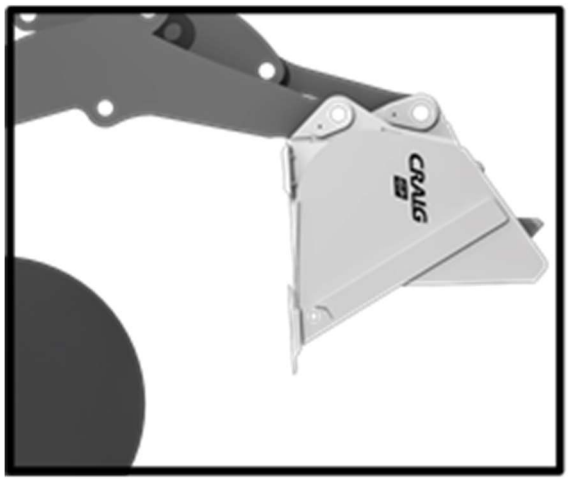

## ADJUSTING ROLLBACK & DUMP STOPS

To add stop material, build up the rollback stop surface using welding material, then grind the surface smooth. More than one adjustment may be needed to obtain the OEM specified degree of rollback.

**CAUTION** REMOVE PAINT BEFORE WELDING OR HEATING. When paint is heated by welding, or by using a torch, hazardous fumes/dust can be generated. Therefore, it is important to do all work in a well-ventilated area and dispose of paint and solvent properly. TURN OFF ENGINE AND DISCONNECT BATTERY PRIOR TO WELDING. Refer to machine's owner's manual for procedure.

To remove stop material, grind the stop surface of the machine until the OEM specified degree of rollback is obtained.

# MAINTENANCE

## LUBRICATION

A well-greased point keeps the metal-to-metal contact to a minimum and with it minimizes wear. A proper greasing technique involves pumping grease onto the fitting until you can visibly see the grease coming out around the joint. It is important to have grease come out into the gap in the joint because it protects the area surrounding from dirt getting in and causing abrasive wear on the metal surfaces in the joint. Grease points shown below at the hinges and at the ends of each cylinder:

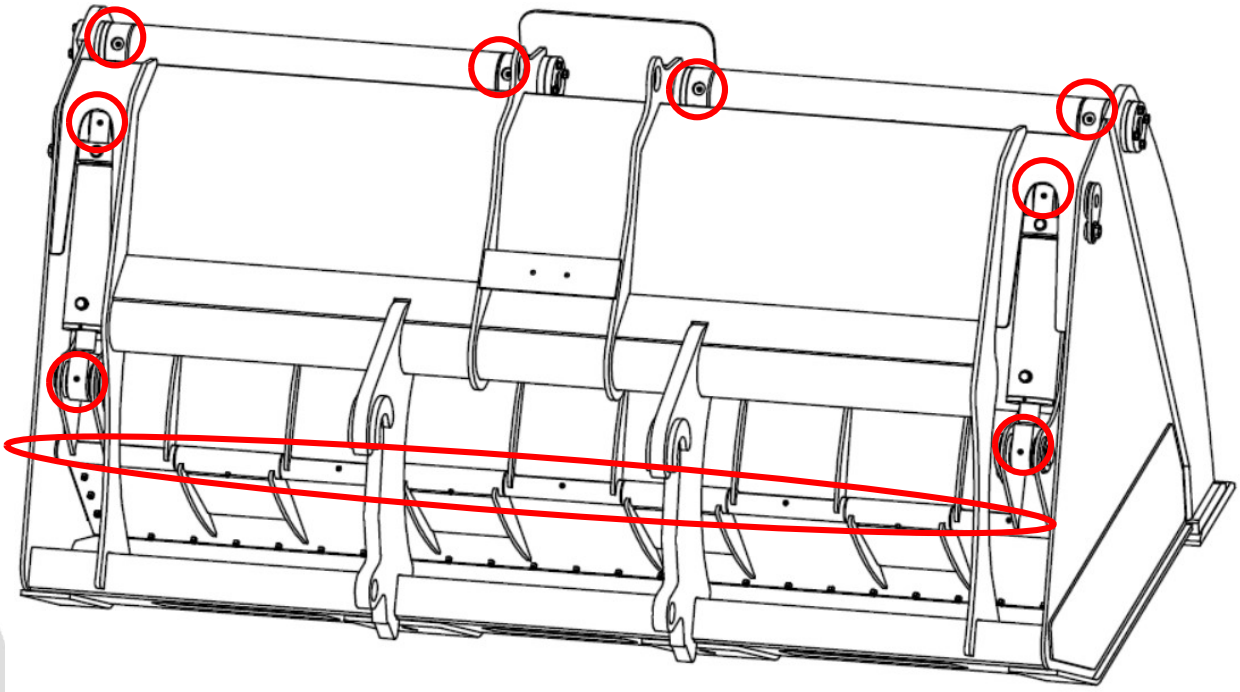

## MAINTENANCE OF G.E.T HARDWARE

**CAUTION** Do Not Apply Any Lubricant of Any Type to G.E.T. Hardware. Any type of fasteners, like bolts and pins, work because of friction. If you apply lubricant to such fasteners, then it will be much easier for them to back off during operation.

**CAUTION** Safety Glasses Must Be Worn When Striking Bolt Heads. When striking the head of a bolt, it is possible for either sparks to develop or for pieces of the head to break off. ALWAYS WEAR SAFETY GLASSES

# MAINTENANCE

## INSTALLING BOLT-ON EDGES

Use the following procedure for installing bolt-on edges:

1. Clean all surfaces of rust, paint, nicks, and burrs.
2. Tighten bolts securing the bolt on edge to listed plow bolt torque specifications. Then apply final torque. It is important to only tighten the bolts first, and not torque them up. This is because the previous torqued bolts could back off as the current bolts are torqued.

## MAINTENANCE OF BOLT-ON EDGES

Periodically check bolt torque. Insufficient bolt torque can result in cutting edge failure in heavy-duty applications. Therefore, it is important to check the bolts regularly to make sure they are not becoming too loose.

**NOTICE** Re-torque Bolts After Approximately 4 Hours of Service. This will ensure the bolt on edge is safely secured, and that it has a maximum service life. Refer to specifications section for bolt torque chart when special torques are not specified.

## TECHNICAL SUPPORT

If you have followed the maintenance instructions contained in this manual, you should have years of trouble-free operation from your Craig attachment. Should you encounter any issue or have any questions about your attachment please contact us at 1-800-565-5007 and ask for technical support.

## READING PRODUCT TAG

Craig Manufacturing Ltd. stamps a blue serial tag onto every attachment. The tag is often located on the rear of the attachment in the upper left corner. The information contained on this tag will be required for parts and support. Craig serial numbers begin with a "T" followed by the year then month of construction. For example, T1203 would denote the year 2012 and 03 the month of March.

# STORAGE

**WARNING** Disconnection from the machine and installation must be done by a qualified technician. NEVER trust that the hydraulic system will not fail. ALWAYS lower booms and attachments to the ground before leaving the cab or operator's station. DO NOT work under or around attachments or heavy items not supported by stands, blocks or safety chains. Furthermore, it is important to use chains and/or stands to steady unstable attachments or heavy components that may fall if being disconnected.

## END OF SEASON

- Clean equipment thoroughly
- Inspect for damage and order any replacement parts.
- Tighten all hardware and make sure there are no loose connections.
- Paint all replacement parts.
- Paint any bare surfaces to prevent rust.
- Lubricate all grease points. Refer to maintenance section.
- Coat exposed portions of cylinder rods with grease.
- Seal hydraulic system from contaminants.
- Secure all hoses in a manner that prevents potential damage during transport.
- Replace any illegible or missing decals.
- Store unit inside a clean, dry area to prolong life.

## BEGINNING OF SEASON

- Review entire operator's manual.
- Clean equipment
- Install any replacement parts.
- Secure all fasteners.
- Check hydraulic hoses for damage and replace as necessary.
- Replace missing or illegible decals.
- Refer to installation section for important information.
- Fully understand this manual and the prime mover operator's manual and take proper precautions prior to testing.

# SPECIFICATIONS

## TORQUE CHART - COURSE THREAD

| | | SAE J429 Grade 5 | | | | SAE J429 Grade 8 | | | |
|---|---|---|---|---|---|---|---|---|---|
| | | | Tightening Torque (ft-lbs) | | | | Tightening Torque (ft-lbs) | | |
| Nominal Dia. (in.) | Threads per inch | Clamp Load (lbs.) | Lubricated K = 0.15 | Thread-locker K = 0.17 | Zinc & Dry K = 0.20 | Clamp Load (lbs.) | Lubricated K = 0.15 | Thread-locker K = 0.17 | Zinc & Dry K = 0.20 |
| 1/4 | 20 | 2029 | 6.3 | 7.2 | 8.5 | 2864 | 9.0 | 10.1 | 11.9 |
| 5/16 | 18 | 3342 | 13 | 15 | 17 | 4719 | 18 | 21 | 25 |
| 3/8 | 16 | 4940 | 23 | 26 | 31 | 6974 | 33 | 37 | 44 |
| 7/16 | 14 | 6777 | 37 | 42 | 49 | 9568 | 52 | 59 | 70 |
| 1/2 | 13 | 9046 | 57 | 64 | 75 | 12771 | 80 | 90 | 106 |
| 9/16 | 12 | 11599 | 82 | 92 | 109 | 16375 | 115 | 130 | 154 |
| 5/8 | 11 | 14408 | 113 | 128 | 150 | 20340 | 159 | 180 | 212 |
| 3/4 | 10 | 21322 | 200 | 227 | 267 | 30101 | 282 | 320 | 376 |
| 7/8 | 9 | 29436 | 322 | 365 | 429 | 41556 | 455 | 515 | 606 |
| 1 | 8 | 38616 | 483 | 547 | 644 | 54517 | 681 | 772 | 909 |
| 1 1/4 | 7 | 53786 | 840 | 952 | 1121 | 87220 | 1363 | 1545 | 1817 |
| 1 3/8 | 6 | 64096 | 1102 | 1249 | 1469 | 103939 | 1786 | 2025 | 2382 |
| 1 1/2 | 6 | 77991 | 1462 | 1657 | 1950 | 126473 | 2371 | 2688 | 3162 |

Refer to serial tag on the attachment for identification. NOTE: your serial tag may not appear exactly as shown below.

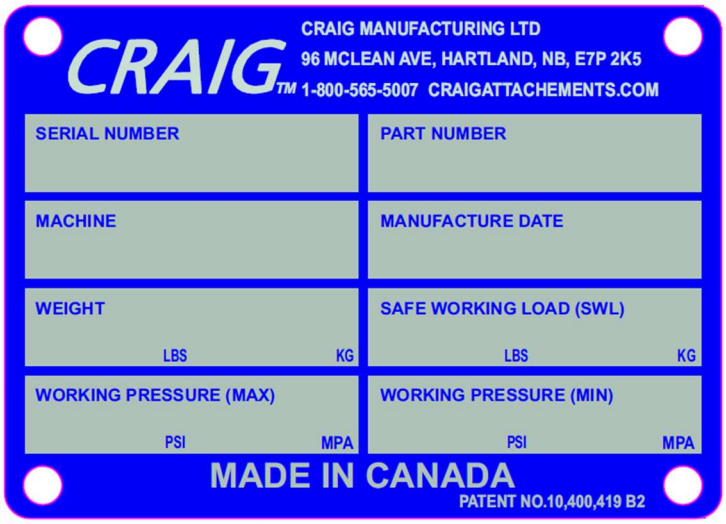

# PARTS

To provide you with the most UP-TO-DATE part information, parts diagrams for this attachment have been moved to our Portal website. Please use these diagrams and parts lists to locate your replacement parts.

https://portal.craigattachments.com/

When servicing your attachment, remember to use only original manufacturer replacement parts. Substitute parts may not meet the standards required for safe and dependable operation.

To facilitate parts ordering when contacting any of our branches, please have the product serial number or product part number for your attachment ready to ensure that you receive the correct parts for your attachment.

The product serial number and product part number for your attachment should be recorded in the space provided in this manual. This information may be obtained from the serial number identification plate located on your attachment.

**NOTE: Most parts orders (in stock) received by 12:00pm (Atlantic Standard Time) can be shipped the same day or following business day.**

# WARRANTY

To provide you with the most UP-TO-DATE warranty information, warranty procedures, technical documents, product terms, and product registration, please go to our website at:

https://www.craigattachments.com/

# NOTES

# NOTES

CRAIG™
ENGINEERING. MANUFACTURING. SERVICE.

**HARTLAND BRANCH**
96 McLean Avenue
Hartland, New Brunswick
E7P 2K5 Canada

**CAMBRIDGE BRANCH**
315 Thompson Drive
Cambridge, Ontario
N1T 2B3 Canada

**BLACKFALDS BRANCH**
88 27323 TWP Rd 394
Lacombe County, Alberta
T4M 0S1 Canada

**LAWRENCEBURG BRANCH**
408 Commerce Way
Ethridge, Tennessee
38456 USA

1-800-565-5007 • WWW.CRAIGATTACHMENTS.COM