CRAIG™
ENGINEERING. MANUFACTURING. SERVICE.

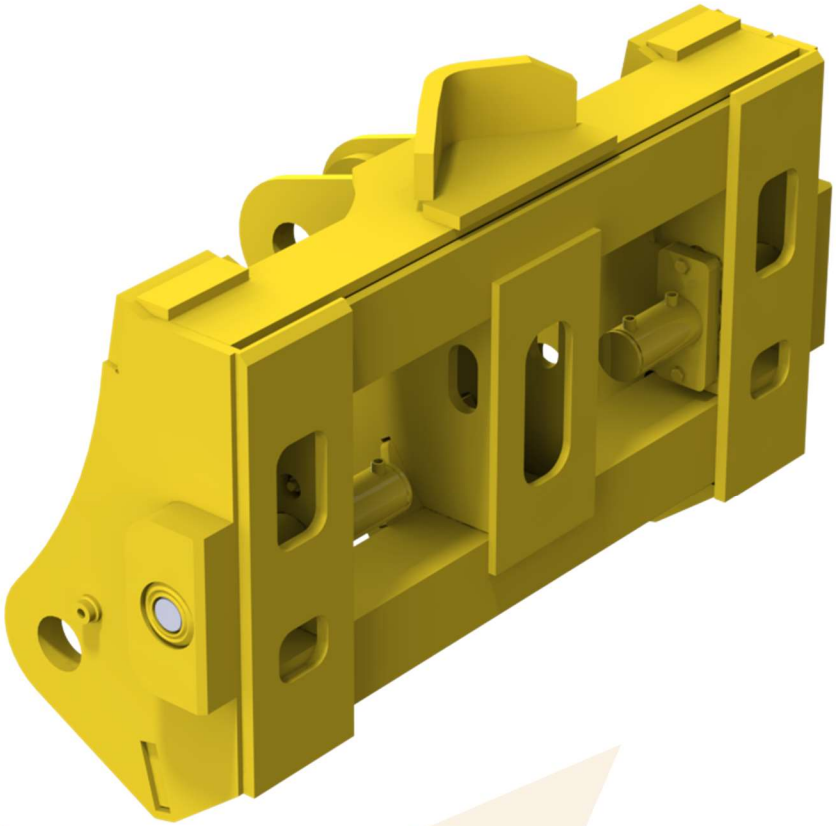

WL-QKMC

CRAIG QUIK KEY COUPLERS

OWNER'S MANUAL

Important safety and operation instructions inside

Read thoroughly before operating

CRAIG MANUFACTURING LTD.
96 Mclean Ave
Hartland, New Brunswick
E7P 2K5 Canada

Tel: 1-506-375-4493
Toll Free: 1-800-565-5007

Email: sales@craigattachments.com
Website: www.craigattachments.com

TABLE OF CONTENTS

PREFACE

INTRODUCTION

SAFETY INSTRUCTIONS

DECALS

INSTALLATION INSTRUCTIONS

OPERATION INSTRUCTIONS

TROUBLESHOOTING

MAINTENANCE

STORAGE

SPECIFICATIONS

PARTS

PREFACE

Congratulations on the purchase of your new Craig Manufacturing Ltd. product. This manual provides safety, operation, and maintenance information. To keep your product in good condition, please read this manual and follow all recommendations. Failure to do so may invalidate your warranty.

When parts or service are necessary contact Craig at 1-800-565-5007 for genuine Craig Parts. Before using your product, make sure your machine is equipped with all the OEM recommended requirements for your product application.

CRAIG FACTORY ORIGINAL PARTS

CRAIG
CUSTOMER SUPPORT CENTER
1-800-565-5007

The best way to ensure equipment reliability is to use only genuine Craig Manufacturing Ltd. Factory Original Parts. Our parts department can help you not only find the right part for your application but also offers advice and support for the repair. Using aftermarket non-approved parts can alter your product's performance characteristics and may affect your warranty.

To help ensure that correct parts are ordered, please record the serial number of your product. Over time serial tags can become tarnished or difficult to read. Please supply this serial number to your dealership when ordering parts and it will ensure the correct part gets ordered.

Serial: _____

Machine: _____

Model: _____

In-Service Date: _____

Purchased From: _____

Never let anyone operate this unit without reading the "SAFETY INSTRUCTIONS" and "OPERATION INSTRUCTIONS" sections of this manual.

NOTE: The illustrations and data used in this manual were current (according to the information available to us) at the time of printing, however, we reserve the right to redesign and change the attachment as may be necessary without notification.

INTRODUCTION

As the new owner and/or operator of the Craig Quik Key coupler we require you take the time to read this Operator's Manual carefully before commencing work.

FOLLOW THE SAFETY INSTRUCTIONS

- Carefully read all the safety information contained in this manual.
- Make sure all safety decals are securely fitted in the cab.
- Immediately replace any safety decals that are missing or damaged.
- Before starting work make sure you have a copy of this Operator's Manual in the cab and are familiar with all the safety procedures and instructions contained in this manual.

INFORMATION FOR THE USER

The user of the Craig coupler is obliged to ensure that the equipment is always in safe working order in accordance with accident prevention regulations, Occupational Safety and Health regulations or any other official instructions.

ENHANCED WARRANTY FOR ELIGIBLE PRODUCTS

Craig offers an enhanced warranty from 12 months (or 2,000 hours which ever comes first) to 36 months (or 6,000 hours) for **eligible products**. To take advantage of this enhanced warranty the eligible product must be registered within 30 days of receiving the product. You can register your product at the following website:

https://www.craigattachments.com/product-registration/

Refer to the contents of this manual to remedy faults and contact Craig at 1-800-565-5007 if you require assistance. Notice that unauthorized modifications to this equipment is prohibited and will void warranty.

SAFETY INSTRUCTIONS

This is an alert symbol. It indicates an imminent or potential hazard. Signal words "DANGER", "WARNING", and "CAUTION" qualify this alert symbol into the following categories:

DANGER	Hazardous situation which, if not avoided, WILL result in death or serious injury
WARNING	Hazardous situation which, if not avoided, COULD result in death or serious injury
CAUTION	Hazardous situation which, if not avoided, could result in minor or moderate injury

The signal word "***NOTICE***" indicates important information that, if not followed, could result in severe damage to equipment or property.

SAFETY PRECAUTIONS BEFORE OPERATION

The primary responsibility for safety with this product falls to the operator. Make sure the product is operated only by trained individuals that have read and understood this manual. If there is any portion of this manual or function you do not understand, contact your local authorized dealer, or Craig Manufacturing Ltd. Keep this manual available for reference.

WARNING!

Read Manual Prior to Installation, Operation or Maintenance
Improper installation, operation, and/or maintenance of your Craig Manufacturing Ltd. attachments can cause death or bodily injury, property damage, or damage to your equipment. Read and understand this manual and all labels before operating or doing any work on the equipment. NEVER allow anyone to operate this unit without first reading the safety and operating instructions. Failure to do so may affect your warranty.

Read your machines owner's manual and always be aware of capacities and heights of all materials moved are within the machines stated operational capacity.

Understand All Safety Decals and Statements
Become familiar with and inform users about all safety decals and safety statements in all manuals and on the back of the attachment prior to operating or working on this product. Know and follow all national occupational safety regulations, local laws, and other professional guidelines. As well as all good work practices when working on or with this product. Know your equipment capabilities and operations.

Worn, damaged, or illegible safety decals must be replaced. New safety decals can be ordered from your local dealer.

SAFETY INSTRUCTIONS

WARNING!

Inspect all equipment prior to operating and ensure all components are in proper working order. Check hardware for tightness and that all guards and safety devices are in place. Know all decals and check for legibility. Replace anything damaged, worn or missing. Make sure operator cab is clean and free of any distracting objects or spills.

Be aware of overhead or buried utilities. Contact your local utilities to locate any underground lines or other hazards.

Make sure all levers, pedals, switches, or other controls are in neutral position prior to starting the engine.

Before exiting the machine, for any reason, follow the "MANDATORY SHUT DOWN PROCEDURE".

MANDATORY SHUT DOWN PROCEDURE

1. Stop the machine on level ground.
2. Lower the attachment to the ground.
3. Move throttle to the idle position.
4. Disengage all power to the attachment.
5. Apply the brakes.
6. Turn off the engine and remove the key.

Never use your attachment as a work platform or personnel carrier

Never lift, move, or swing an attachment over anyone.

Do not use attachment for lifting materials outside of its purpose. This attachment is not a lifting device unless approved for your jurisdiction.

Never perform any work on the attachment unless you are authorized and qualified to do so. Work in pairs. Always read the operator service manuals before any repair is made. Wear proper PPE.

Personal Protective Equipment (PPE) Required
Remove ignition key and immobilize the machine during installation, inspection, or service. Always follow safe work practices when installing, servicing, or inspecting your product by wearing only snug-fitting clothing, removing jewelry, and securing long hair. Wear safety goggles to protect your eyes from hydraulic fluid, sparks, dirt, and dust. Always have a fire extinguisher rated BC on hand for flammable liquid and electrical fires. Lastly, always lift with your legs, and use lifting equipment when applicable.

SAFETY INSTRUCTIONS

WARNING!

CRUSH HAZARD – DO NOT work under or around raised arm or attachment.
Lower or Support Unstable/Raised Equipment. NEVER trust that the hydraulic system will not fail. ALWAYS lower booms and attachments to the ground before leaving the cab or operator's station. DO NOT work under or around attachments or heavy items not supported by stands, blocks or safety chains. Furthermore, it is important to use chains and/or stands to steady unstable attachments or heavy components that may fall if being disconnected.

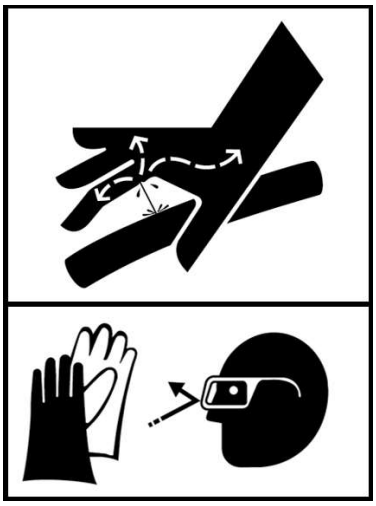

Skin Injection Hazard

- Relieve pressure before working on system
- Wear gloves & eye protection
- Detect leaks with wood or cardboard
- NEVER use hands to detect leaks
- Fluid injected in skin must be surgically removed

Hydraulic Safety

Always inspect hydraulic components before operating your product. Replace any damaged or worn parts immediately. Temperature changes can change hydraulic pressure, which allow the cylinders to drop unexpectedly, causing injury or damaging hydraulic components. Hydraulic fluid under pressure can cause bodily harm. If you suspect a hydraulic leak note the following:

- The high pressure of the hydraulic lines can cause leaks that can puncture flesh. Therefore, it is important to keep uncovered body parts such as face, eyes, and arms away from a suspected leak.
- Flesh injected with hydraulic fluid may develop gangrene or other permanent disabilities. If injured by leaking hydraulic fluid, see a doctor immediately. Hydraulic fluid could have injected into the wound, and it may not be known.
- Before disconnecting hydraulic lines, wait until the fluid cools down. Hot hydraulic fluid can cause severe burns.
- Always wear protective clothing, such as gloves and safety glasses, and use a piece of cardboard when searching for hydraulic leaks. DO NOT USE YOUR HANDS.

Never make hydraulic repairs while the system is under pressure. Serious personal injury or death could occur. Never work under a raised attachment. Check the weight of the attachment and use handling equipment of sufficient capacity.
Always tag "DO NOT OPERATE" until all problems are corrected.

SAFETY INSTRUCTIONS

WARNING!

Lubricants may contain toxins, cause adverse health effects or be hazardous to the environment. Ensure environmentally safe disposal. Observe all safety labels.

Do Not Alter Attachment

Any alterations to this product could affect the safety and performance of the attachment. When making repairs, use only Craig Manufacturing Ltd. parts, and follow the provided procedures. If the parts and procedures are not used the warranty is void and any alterations may cause the attachment to become unsafe. Any modifications must be authorized in writing by Craig Manufacturing Ltd.

Safe Transport

- Travel only with the attachment in a safe transport position to prevent uncontrolled movement. Drive slowly over rough terrain and slopes.
- When transporting on a trailer, secure attachment using tie downs in recommended locations to maintain attachment stability.
- When driving on public roads use safety lights, reflectors, and slow-moving vehicle signs to prevent accidents. Check local government regulations that may affect you.
- Do not drive close to ditches or excavations, because a cave-in could occur.

Keep attachment close to the ground when engaging/disengaging attachments!

It is possible to drop an attachment during engaging and disengaging procedures. Therefore, it is best to make sure the attachment is kept close to the ground. Visually check that the attachment is securely locked before operating. Follow the procedures outlined in the operation section of this manual. If coupler is not functioning properly, it must be checked/repaired by a qualified service technician prior to use. Failure to do so could result in serious injury or death.

If attachment is loose on coupler, immediately stop use!

If the attachment seems loose on the coupler, please immediately stop use and call Craig Technical Support at 1-800-565-5007. There could be something wrong that could affect the safety of the coupler.

SAFETY INSTRUCTIONS

CAUTION!

Remove Paint Before Welding or Heating
When paint is heated by welding, or by using a torch, hazardous fumes/dust can be generated. Therefore, it is important to do all work in a well-ventilated area and dispose of paint and solvent properly. TURN OFF ENGINE AND DISCONNECT BATTERY PRIOR TO WELDING. Refer to machine's owner's manual for procedure.

When removing paint:

- It is important to wear an approved respirator when sanding or grinding paint.
- If you use a paint stripper or solvent, remove the stripper with soap and water.
- Remove solvent or paint stripper containers and other flammable material from the welding/heating area.
- Allow fumes to disperse at least 15 minutes before welding or heating.

Check coupler for debris before operating!
Debris could build up in the coupler during use. Make sure the debris is cleared out before operation. Debris can interfere with the operation of the locking mechanisms and could affect the safety of the coupler.

DECALS

Item	Part #	Description	Quantity
1	490975-EN	Decal, safety check	1
2	22558-EN	Decal, pin bosses machined	1
3	159025-EN	Decal, pressure setting	1
4	159021-EN	Decal, set stops	1

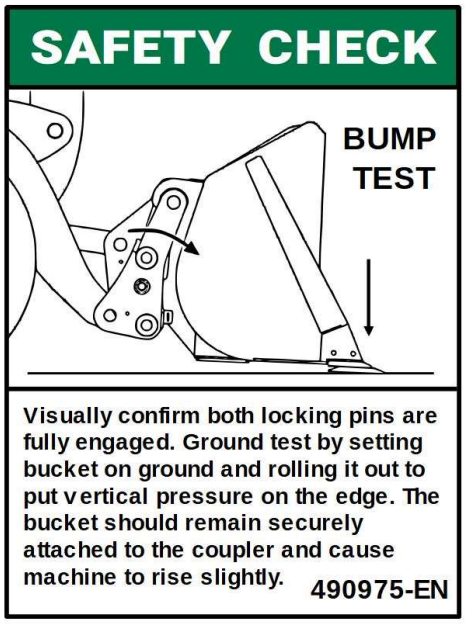

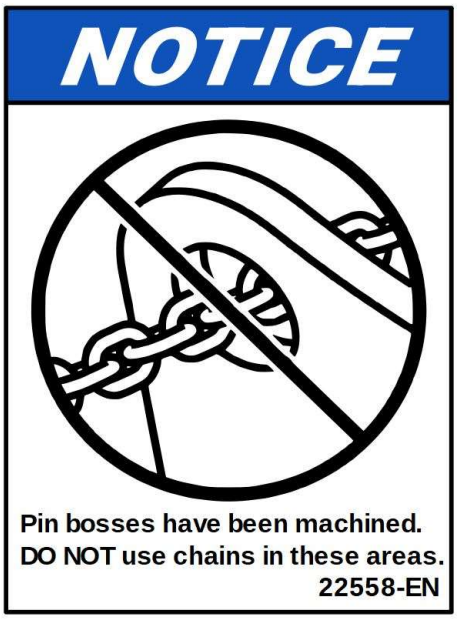

DECALS

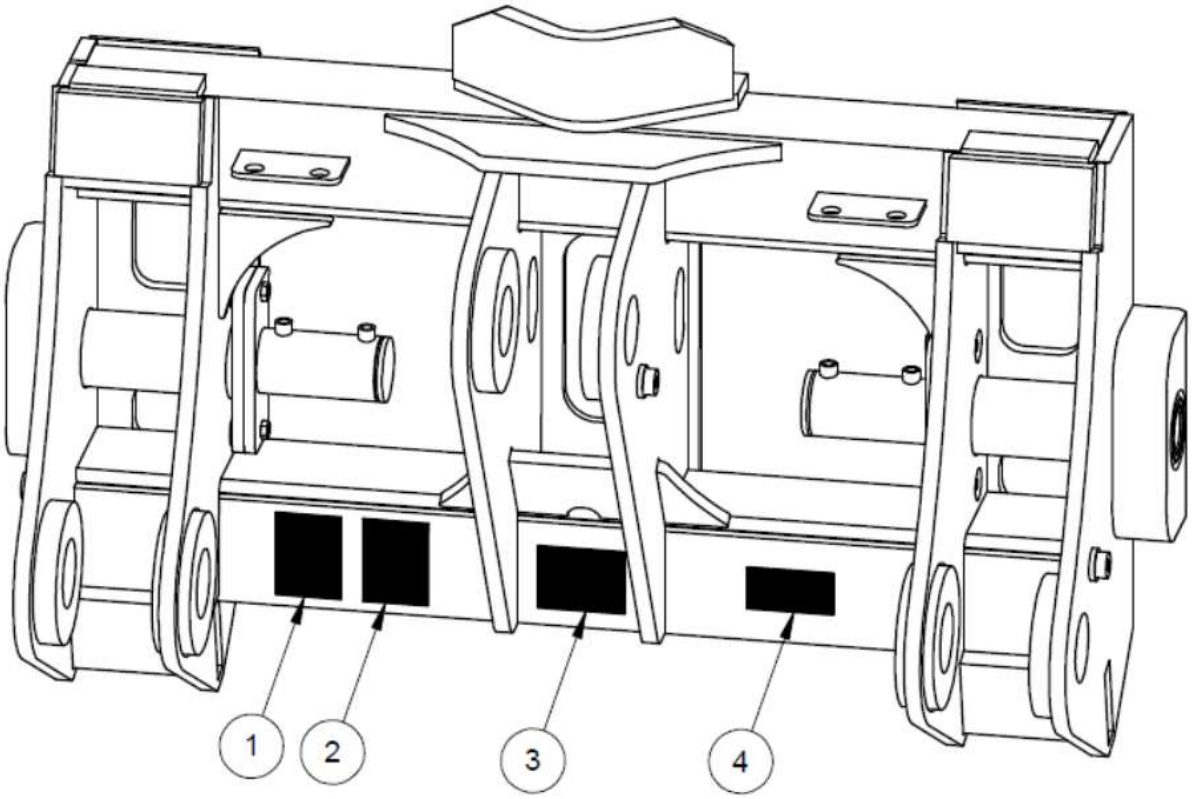

NOTE: *YOUR PRODUCT MAY NOT APPEAR EXACTLY AS SHOWN*

INSTALLATION INSTRUCTIONS

NOMENCLATURE

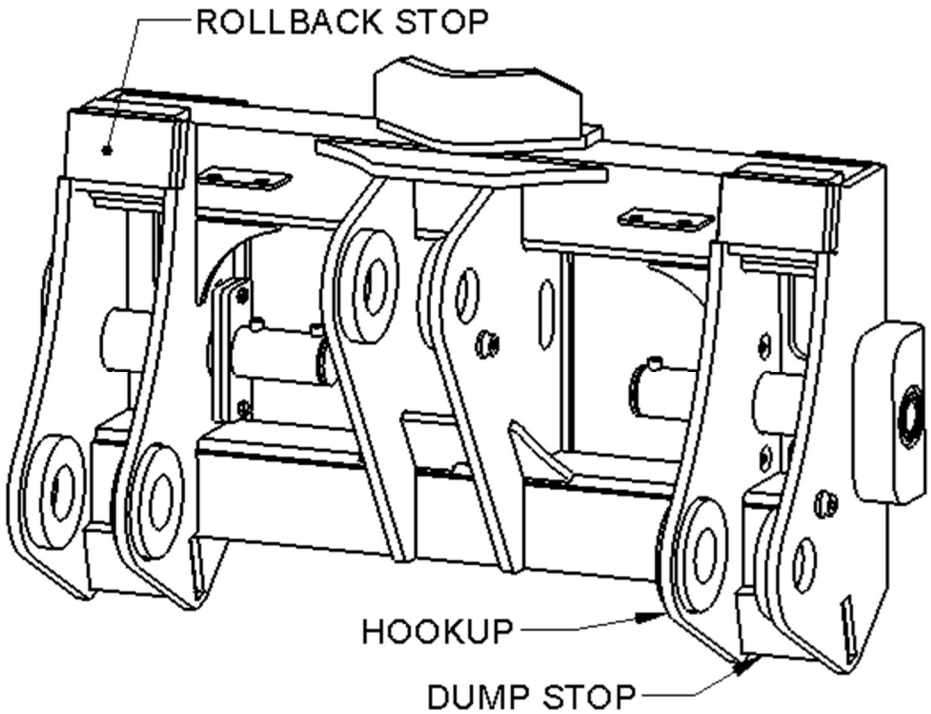

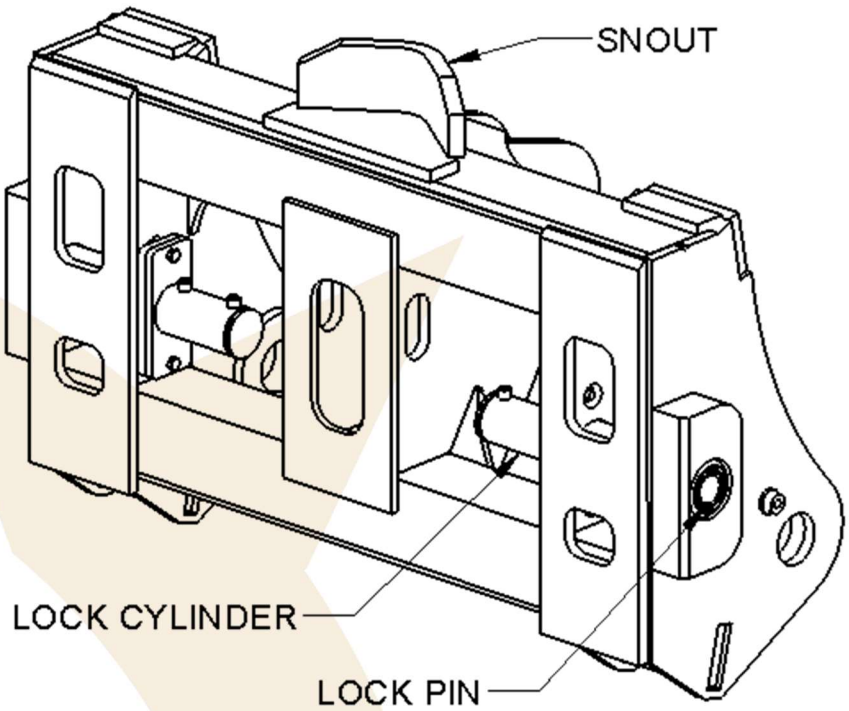

NOTE: *YOUR PRODUCT MAY NOT APPEAR EXACTLY AS SHOWN*

INSTALLATION INSTRUCTIONS

TERMINOLOGY

Lock Cylinder:	The floating hydraulic cylinder that actuates the lock pins to attach or detach the loader attachment.
Lock Pin:	Machined pins that secure the hooks on the attachment to the coupler.
Hookup:	The connection between the loader to the coupler.
Rollback Stops:	The rollback stops are installed on attachments to stop the attachment from rolling to far back and interfering with the loader linkage or allowing the linkage to go over center.
Dump Stops:	The dump stops are installed on attachments to stop the attachment from dumping too far and interfering with the loader boom or allowing the linkage to go over center.
Snout	The top (male) part of the QKM coupler that is used to hook into the "boomerang" (female) on an attachment with a QKM hookup

INSTALLATION AND REMOVAL

Read all safety precautions before installing the attachment. Refer to the machine's owner's manual for direct pin-on installation instructions. If a coupler system is involved ensure that the coupler is working properly before use. In addition, refer to the manufacturer for the coupler owner's manual to familiarize yourself with its proper procedures and operations. Craig coupler owner's manuals can be found by going to:

www.craigattachments.com/technicaldocuments

Check and/or adjust rollback and dump stops as needed before using attachment. Refer to the "MAINTENANCE" section of this manual for instructions on checking and adjusting stops.

INSTALLATION INSTRUCTIONS

INSTALLING THE COUPLER

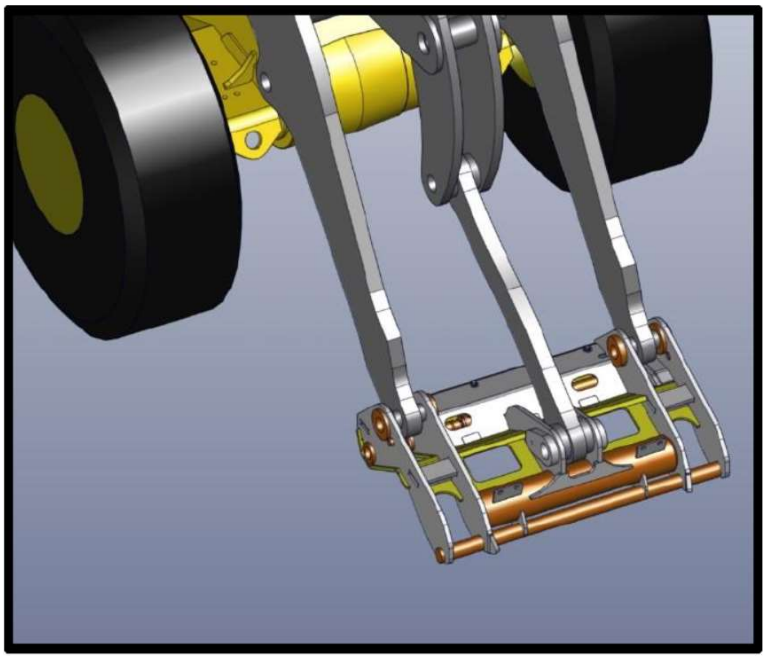

1. Place the coupler flat on the ground. Inspect the pin bores and remove any burrs.

2. With the boom arms clear from the coupler, test fit the pins in the coupler bores. Remove the pins and apply anti-seize lubricant to the pins and pin bores on the coupler.

3. Align the boom arms of the loader with their respective pin locations on the coupler. It is best to position the boom arm pin holes slightly higher than the coupler pin holes. The coupler can be raised for alignment the pins holes.

4. Pin the coupler to the loader boom arms. Use the OEM shims to center the coupler on the boom arms. Secure pins with the pin retaining hardware.

5. Secure the loader tilt linkage to the coupler using the pins and pin retaining hardware. The coupler may need to be tilted to align it with the loader tilt linkage. Use the OEM shims to align the tilt linkage between the center ribs.

6. Use the loaders hydraulic controls to relieve any hydraulic pressure and place the coupler in an unpressurised resting position.

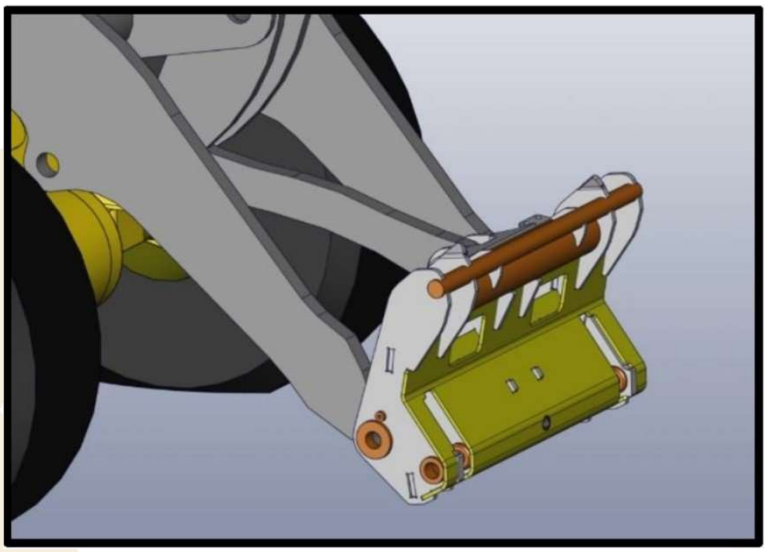

INSTALLATION INSTRUCTIONS

INSTALLING ROLLBACK STOPS

NOTICE Some Craig products have the rollback stops shipped loose. In this event, it is important to follow this procedure for setting the rollback stops on a loader. Failure to set the stops correctly can result in premature wear and fatigue of attachment and linkage components. DO NOT operate attachment without installing rollback stops.

WARNING Turn off the machine during install/maintenance. Never leave equipment unattended with the engine running or with attachment in a raised position.

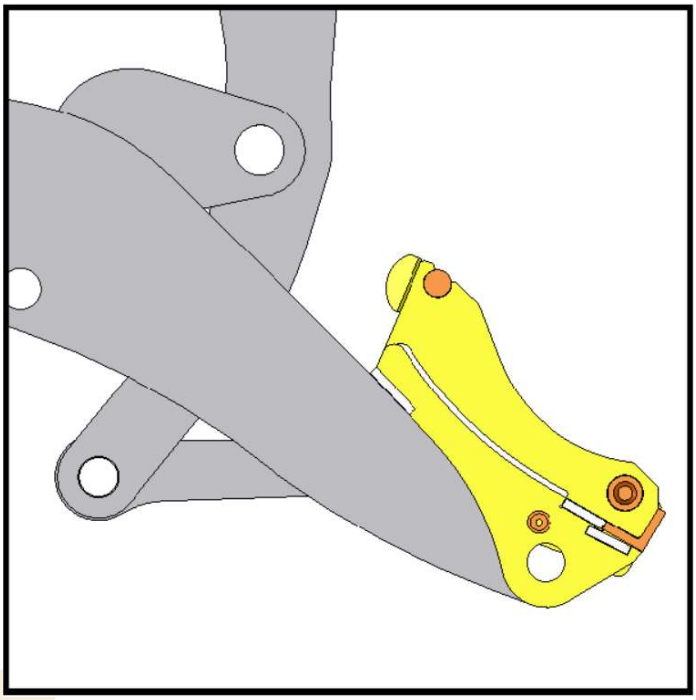

1. Install attachment to loader linkage. If unit has a quick coupler, set the stops with the attachment mounted on the coupler.
2. Tilt attachment to max rollback position.
3. You may have to lower boom arms until attachment reaches maximum rollback angle (usually at carry position). Refer to OEM specifications for correct angle.
4. Set rollback stops in position so that they clear the top boom arms by 1/16" to 1/8". Mark the position of the stops on the attachment.
5. Lower attachment to the ground and remove paint from the areas to be welded.

   CAUTION REMOVE PAINT BEFORE WELDING OR HEATING. When paint is heated by welding, or by using a torch, hazardous fumes/dust can be generated. Therefore, it is important to do all work in a well-ventilated area and dispose of paint and solvent properly. TURN OFF ENGINE AND DISCONNECT BATTERY PRIOR TO WELDING. Refer to machine's owner's manual for procedure.
6. Repeat steps 2 and 3. Then, hold stops in position and tack weld in place.
7. Lower attachment to the ground and repeat steps 2 and 3 - check clearance. NOTE: Some manufacturers specify interference up to 1/4".
8. Finish welding stops in position and allow weld to cool. Lastly, touch up with paint.

INSTALLATION INSTRUCTIONS

INSTALLING DUMP STOPS

NOTICE Some Craig products have the dump stops shipped loose. In this event, it is important to follow this procedure for setting the dump stops on a loader. Failure to set the stops correctly can result in premature wear and fatigue of attachment and linkage components. DO NOT operate attachment without installing dump stops.

WARNING Turn Off the Machine During Install/Maintenance Never leave equipment unattended with the engine running or with attachment in a raised position.

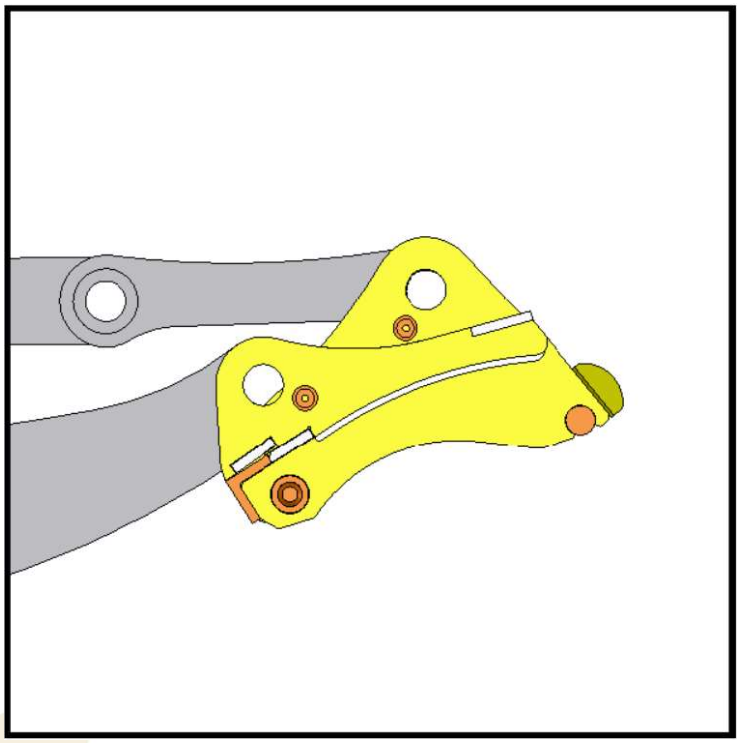

1. Install attachment to loader linkage. If unit has a quick coupler, set the stops with the attachment mounted on the coupler.
2. Tilt attachment to max dump position.
3. Lift loader boom up to point where bell crank stop surface contacts boom torque tube stop surface (usually just before full lift). Refer to OEM specifications for correct angle.
4. Set dump stops in position so that they contact underside of boom arms. Mark the position of the stops on the attachment.
5. Lower attachment to the ground and remove paint from the areas to be welded. **CAUTION** REMOVE PAINT BEFORE WELDING OR HEATING. When paint is heated by welding, or by using a torch, hazardous fumes/dust can be generated. Therefore, it is important to do all work in a well-ventilated area and dispose of paint and solvent properly. TURN OFF ENGINE AND DISCONNECT BATTERY PRIOR TO WELDING. Refer to machine's owner's manual for procedure.
6. Repeat steps 2 and 3. Then, hold stops in position and tack weld in place.
7. Lift loader boom arms and repeat steps 2 and 3 and check clearance.
8. Finish welding stops in position and allow weld to cool. Lastly, touch up with paint.

INSTALLATION INSTRUCTIONS

INSTALLATION OF COUPLER HYDRAULIC KIT

NOTE: Before beginning this installation, place the machine in park and shut off the engine. Secure the machine from rolling using wheel chocks and disconnect the battery. Follow all loader manufacturer instructions for preparing the machine to be welded on.

1. Inside the front module of the machine, find a suitable location to mount the supplied coupler valve. Ensure there is enough room around the valve to connect and route the hydraulic hoses.
2. Weld the mounting bracket to the sidewall of the front module and secure the valve to it using the included hardware.
3. Find a test port to tee into that supplies continuous pressure (pilot pressure). The line must supply at least **400-800 psi** continuous pressure while the engine is running, otherwise locking pins may retract without warning. **NOTE: The Craig hydraulic control kit is rated for up to 2500 psi.**
4. Install a run tee fitting in the pressure line. Route the hose from the pressure port of the Craig valve to the run tee and tighten the fittings at both ends.
5. Find a return line to tee into and install a run tee fitting. Route the hydraulic hose from the return port on the Craig valve to the run tee and tighten the fittings at both ends.
6. Route the extend and retract from the valve down the boom arms. Ensure there is clearance between the hoses and the front of the cab through the full range

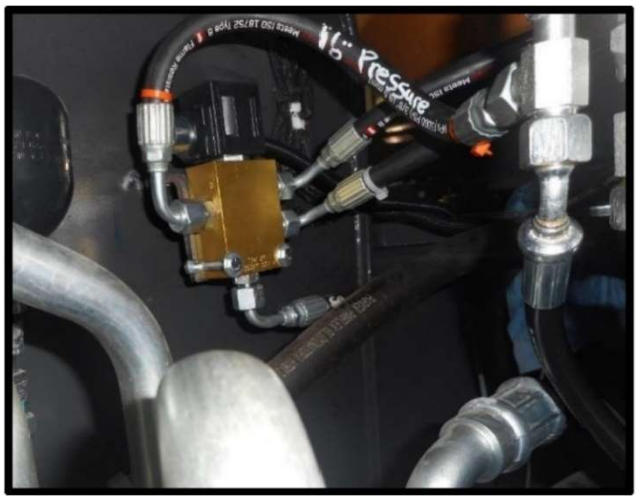

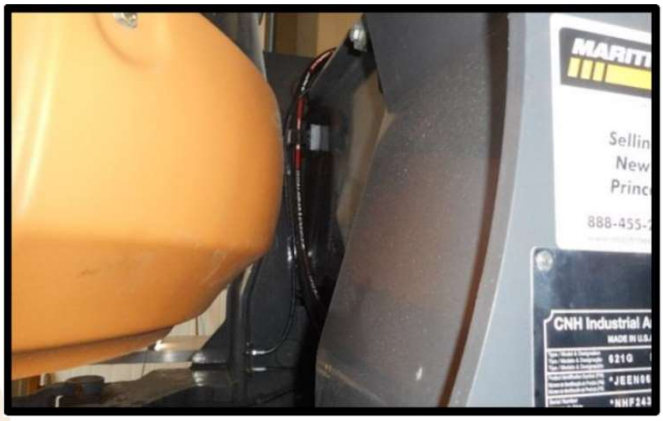

of articulation. Ensure there is enough slack in the lines through the full range of motion of the boom arms.

7. Install any necessary hose clamps to secure the hoses along the boom arms.
8. Connect the extend and retract lines to the coupler. The extend line must be connected to the barrel end of the cylinder(s) and the retract line must be connected to the rod end of the cylinder(s). On double acting cylinder the extend line must be connected to the center port of the cylinder.
9. Ensure there is enough slack in the hoses through the full range of motion of the tilt cylinder and that the hoses aren't going to drag on the ground during normal operation.

HYDRAULIC SCHEMATIC

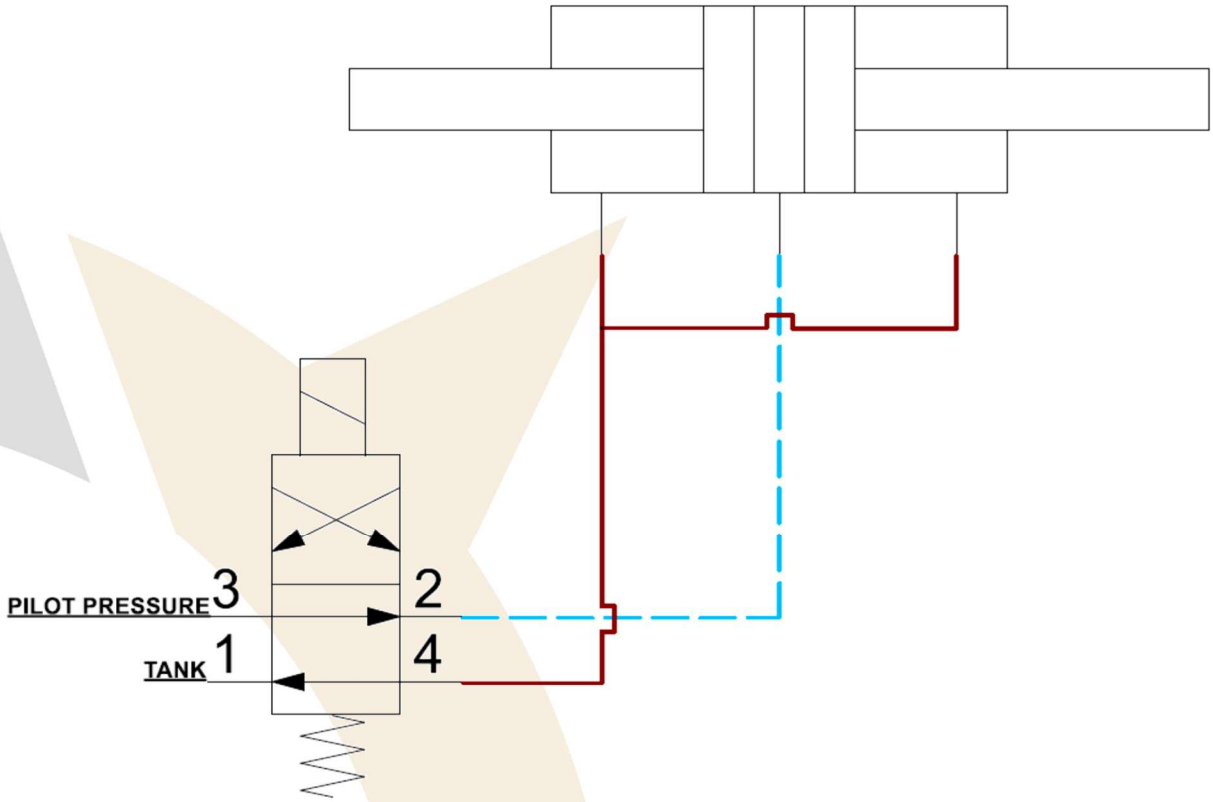

INSTALLATION INSTRUCTIONS

INSTALLATION OF COUPLER WIRING HARNESS

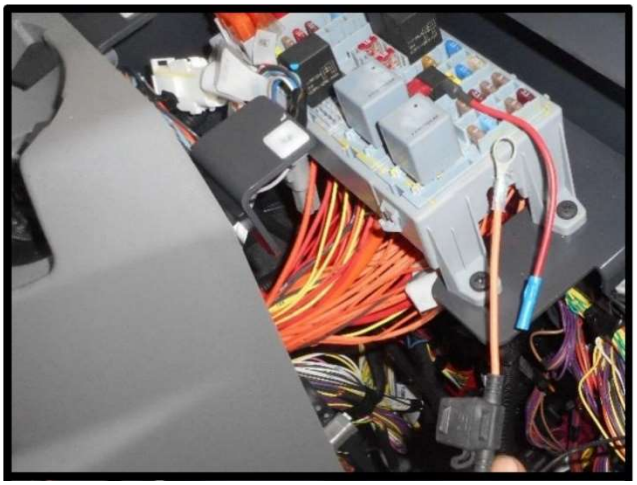

1. Remove interior panels to gain access to the fuse panel and floor. Route the cable through an existing hole in the floor. Use a gromet to protect the cable. If no hole exists, drill a 13/16" hole in the floor and install a box connector. Check the underside of floor for electrical or hydraulic before drilling to avoid damage. **TIP:** Use another wire passing through the floor to help locate the drilling location on the bottom side of the floor panel.
2. The power connection must be connected to fused 24V keyed power. This fused connection will protect the valve solenoid from any electrical surges. Use a supplied "Add a circuit" included in the kit to connect to a power source, this will take one existing fuse and convert it to two fuses, each on its own circuit. If one blows the other will still have power.
3. Locate an existing fuse (keyed power) less than 10A. Install the "Add a Circuit" according to the instructions printed on the package. Both the existing and the new fuse will work independently. When using the "Add a Circuit", the in-line fuse supplied with the Craig Coupler Wiring Harness should be removed. **NOTE:** Slight modifications to the fuse panel cover (if equipped) may be required in some cases to allow the cover to close tightly.

INSTALLATION INSTRUCTIONS

4. Locate a suitable ground connection to connect the black ground wire to. Generally, there will be a ground terminal post in the same location as the fuse box of the machine.
5. Locate an available dashboard mounting hole for the switch and remove the cover plate. **NOTE:** Switch fits most OEM dash cut-outs. Slight modification of hole may be required on some machines. **TIP:** Operator will have to use both hands to operate the switch and joystick simultaneously when coupling and uncoupling. Choose a switch location that will most easily facilitate this.
6. Route the switch cable behind the panel. A loop of stiff wire may be required to pull the wire behind the paneling.
7. Pull wiring harness clip through the mounting hole and connect the harness to the switch. Ensure the clip 'clicks' into place and the clip is secure.
8. Press the switch into the mounting hole to secure it into the dashboard. **TIP:** Some mounting panels can be removed from the dash to make installing the switch easier.
9. Route the cable going through the floor across the loader articulation point to the coupler control valve. A weatherproof connector can be used, or the wires can be soldered together. Use the included loom to protect the loose wires. Secure the grey wire to wires or hoses crossing the articulation joint using zip ties. Ensure the grey wire is clear of all moving parts and pinch points.

TESTING COUPLER CONTROL KIT

To test the coupler functionality, start the engine. The locking pins of the coupler should extend when the engine is running, and the toggle switch is untouched. When the toggle switch is pressed and held, the pins should retract. As soon as the switch is released, the locking pins will extend. This is a safety feature to prevent the locking pins from being left retracted or retracting accidentally during operation.

Extend and retract the pins several times to purge any air out of the hydraulic lines.

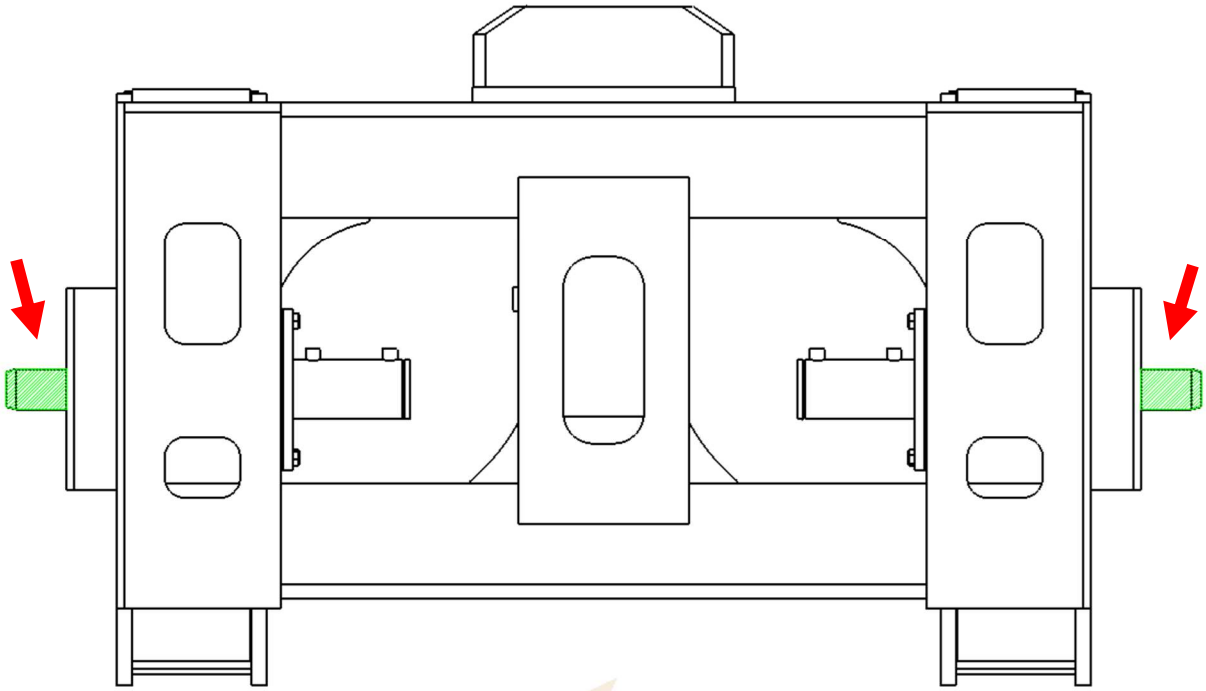

OPERATION INSTRUCTIONS

INTENDED USE

Craig Combo Coupler allows you to use your existing fleet of OEM specific hook-up attachments with no modifications on any brand of carrier. The weight of the attachment and density of working material must be appropriate for the machine. The weight of this coupler must be considered when evaluating capacity. Use outside of this scope is considered misuse.

OPERATING THE ATTACHMENT

Read all safety precautions before operating the coupler. Refer to the machine's owner's manual for further operation instruction.

TRANSPORTING

Follow all local government regulations that may apply along with recommended tie down points and any equipment safety precautions at the front of this handbook when transporting your attachment.

COUPLER OPERATION

WARNING Ensure all bystanders are clear of the machine and attachment before beginning coupling or uncoupling from the attachment.

STEP 1: Tilt the coupler forward so it is approximately 30° from vertical. Align the machine with the attachment so the coupler is centered between the hooks. Lower the boom arms so the top bar of the coupler is below the throat of the attachment hookup.	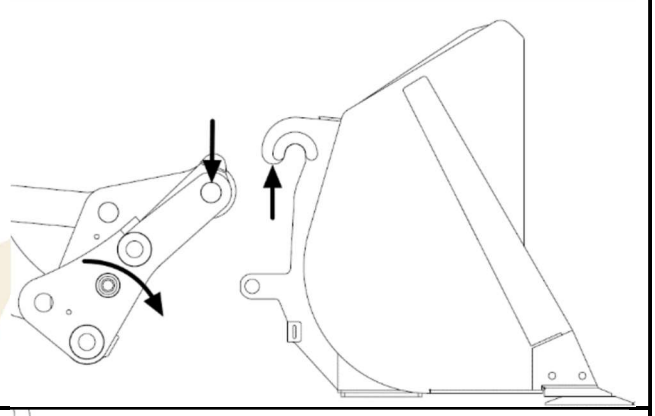
STEP 2: Slowly drive forward into the attachment until the top bar of the coupler contacts the back side of the attachment hookup.	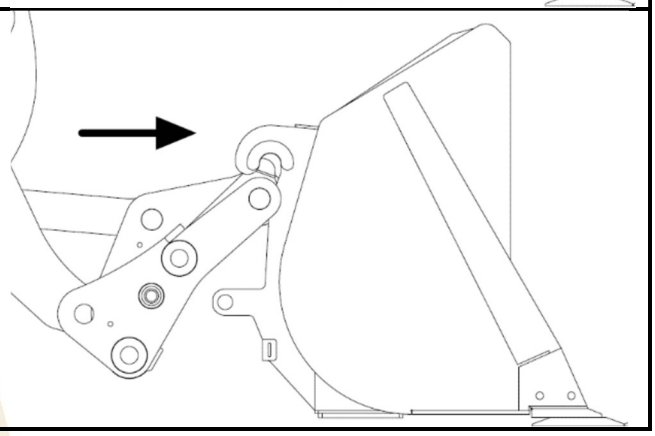

OPERATION INSTRUCTIONS

STEP 3: Raise the boom arms so the top bar of the coupler is fully engaged in the throat of the hooks.	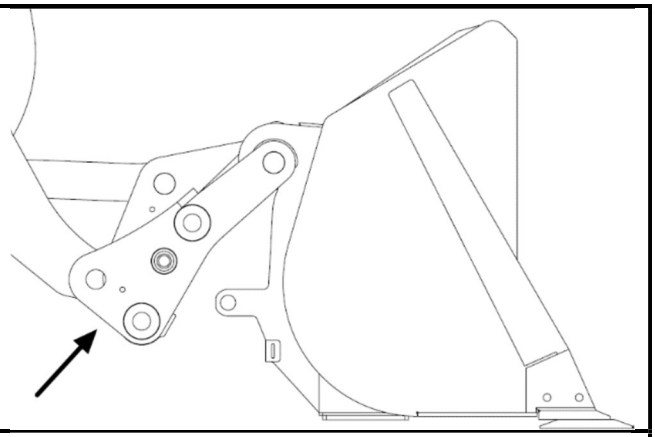
STEP 4: Press and hold the coupler switch to retract the locking pins. Visually confirm the pins are fully retracted	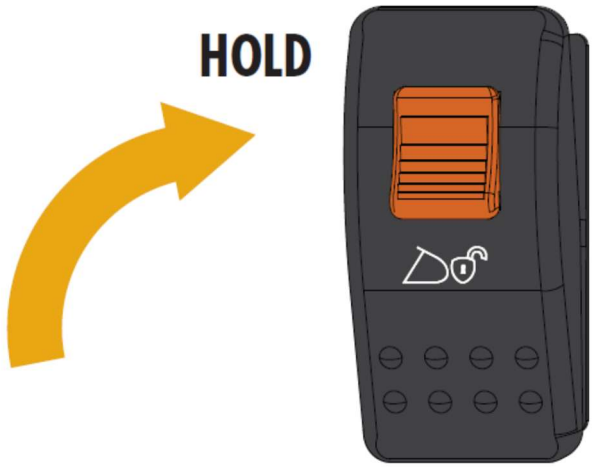
STEP 5: While still holding the switch with one hand, use the other hand to fully curl the coupler back until the attachment is securely seated on the coupler and not touching the ground.	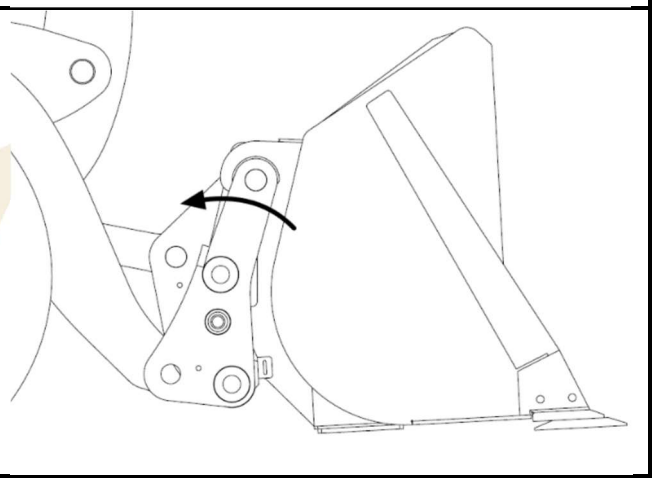

OPERATION INSTRUCTIONS

STEP 6: Release the switch and allow the locking pins to extend. **TIP:** Keeping the attachment level or just slightly rolled back will enable the locking pins to engage with the hookup more easily. Rolling the attachment back fully will put more pressure on the locking pins while engaging.	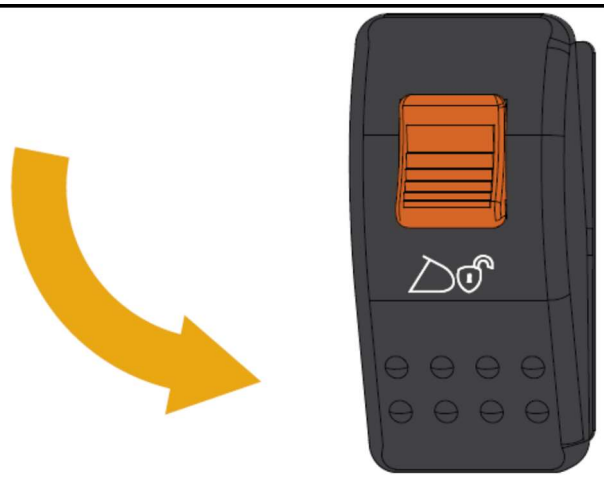
STEP 7: Visually confirm both locking pins are fully engaged. Ground test the bucket by setting it flat on the ground and rolling it out to put vertical pressure on the edge. The bucket should remain securely attached to the coupler and cause the front of the machine to rise slightly.	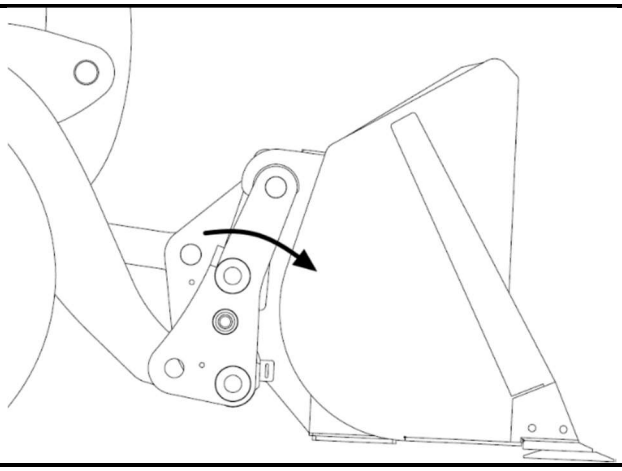

OPERATION INSTRUCTIONS

ATTACHMENT REMOVAL

WARNING Ensure all bystanders are clear of the machine and attachment before beginning coupling or uncoupling from the attachment. It is best to uncouple from attachments on smooth, level ground. Uneven or sloped ground can make coupling and uncoupling from attachments more difficult.

STEP 1: Position the bucket a few inches from the ground. **TIP:** Keeping the attachment level or just slightly rolled back will enable the locking pins to disengage from the hookup more easily. Rolling the attachment back fully will put more pressure on the locking pins while disengaging.	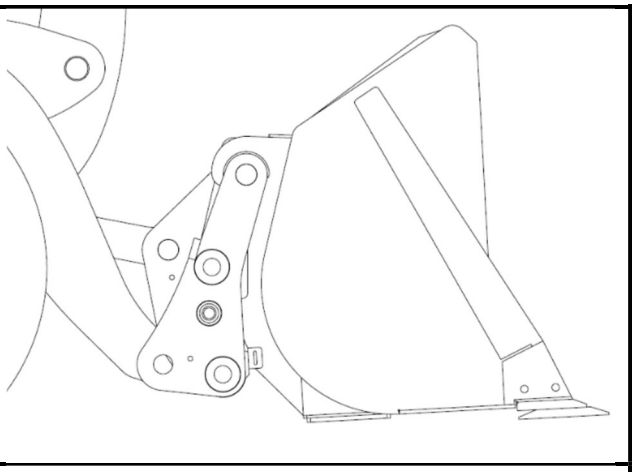
STEP 2: Press and hold the coupler switch to retract the locking pins. Visually confirm the pins are fully retracted.	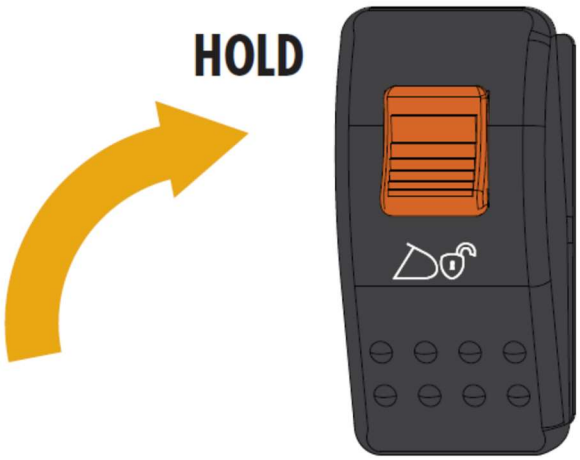
STEP 3: While still holding the coupler switch with one hand, use the other hand to curl the bucket out and lower it to the ground. **TIP:** Keeping the back of the attachment a few inches off the ground while curling out of the hookup will help prevent the hookup lug from catching on the frame of the coupler during this step.	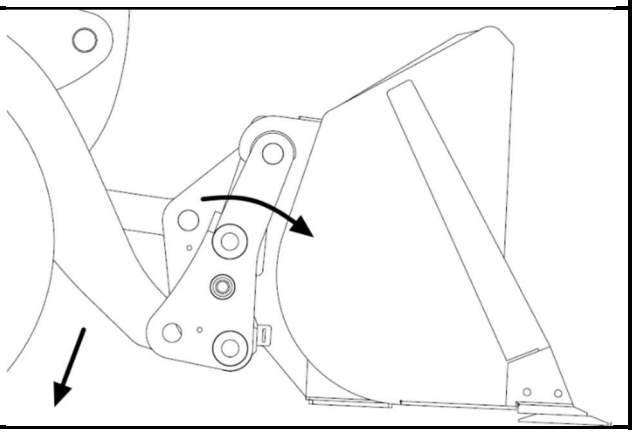

OPERATION INSTRUCTIONS

STEP 4: Lower the coupler clear from hookup.	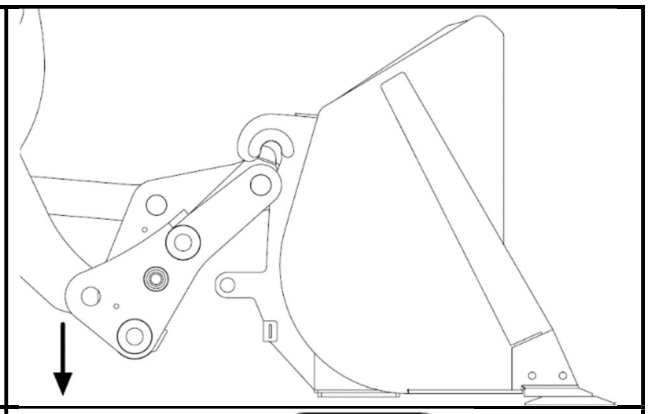
STEP 5: Once the coupler is clear from the hookup, the switch can be released.	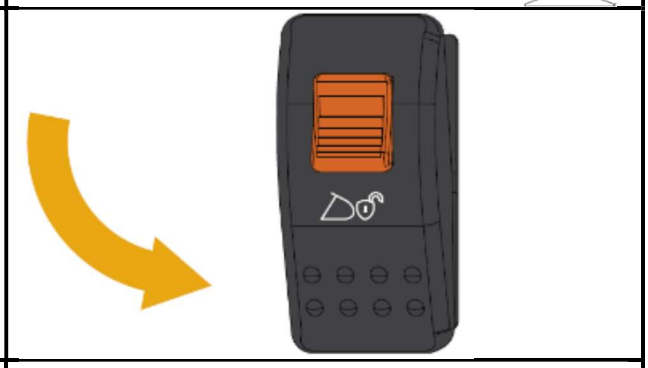
STEP 6: The loader can now be backed away from the attachment.	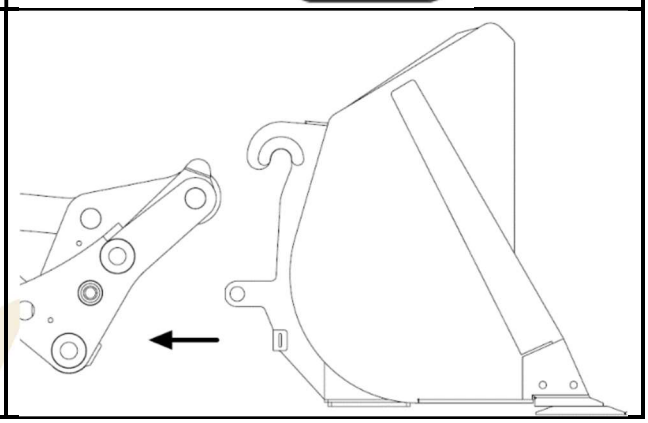

TROUBLESHOOTING

Problem	Possible Cause	Remedy
Attachment is loose on coupler	Pins or bushings worn	Replace if worn
	Hookup mating surfaces worn	Contact Craig Tech Support at 1-800-565-5007
	Pins not fully engaged due to misalignment	Ensure coupler can align properly with hookup. The hookup stops may need to be adjusted. DO NOT modify stop surface of coupler.
Can't disengage lock pins	No hydraulic power to lock cylinder	Refer to Operation Instructions to verify correct procedure is followed for unlocking coupler.
		Check for leaks/damage to hoses/fittings. Repair as necessary.
		Check for problem with control box or electrical system.
	Pins stuck/seized	Ensure pins are greased. Remove attachment from coupler at least once per shift to reduce risk of seizing.
		Check/clean any debris that may impede the pin from moving.
Premature wear of attachment or linkage	Dump stops or Rollback stops not set correctly	Refer to "INSTALLATION INSTRUCTIONS" section for setting dump and rollback stops.
Linkage going over center	Dump stops not set correctly	Refer to "INSTALLATION INSTRUCTIONS" section for setting dump stops.
Locking pins retract without warning	Coupler hydraulic kit not supplied with continuous pressure	Refer to "INSTALLATION INSTRUCTIONS" section for coupler hydraulic kit. Continuous pressure of up to 3000 psi required.

MAINTENANCE

GENERAL INFORMATION

It is the operator's responsibility to inspect all equipment daily. Regular maintenance is necessary to prolong the life of the equipment, avoid costly shutdowns, and keep things running optimally.

WARNING Operator and maintenance personnel must be trained and familiar with the entire manual. Refer to the "SAFETY INSTRUCTIONS" section and follow the "MANDATORY SHUTDOWN PROCEDURE" prior to doing any work on the machine.

PERIODIC MAINTENANCE TABLE		
Procedure	Daily	Weekly
Inspect all equipment for damage, worn parts, cracked welds, etc. If a crack is found in either the steel structure or welds, the attachment must be removed from the machine and Craig Contacted immediately. *Contact Craig Tech Support (1-800-565-5007) for recommended weld procedures.*	X	
Check pins and bushings for play or wear. Replace if worn.	X	
Hardware - replace missing or damaged bolts/fasteners, tighten as necessary	X	
Check for kinked/pinched or worn hoses. *Repair/reroute as necessary*	X	
Hoses - check for leaks. *Repair/tighten as necessary*	X	
Decals - replace worn or missing	X	
Lubricate grease points. See following pages.	X	
Inspect coupler hooks. Ensure there are no cracks, holes, or any other deformations in the hooks. Contact Craig if any are found.	X	
Inspect rollback and dump stops. See following pages.		X
Check base edge and wear pads or any wear components for the attachment. Replace if thinning.		X
Inspect coupler stops if equipped. See following pages.		X

MAINTENANCE

CHECKING ROLLBACK STOPS 1. Park the machine on a firm, level, surface. 2. Tilt attachment to max rollback position. 3. Lower boom arms until attachment reaches maximum rollback angle (usually at carry position). Refer to OEM specifications for correct angle. *If the angle is not correct, then the stops will have to be adjusted to ensure performance is not affected.*	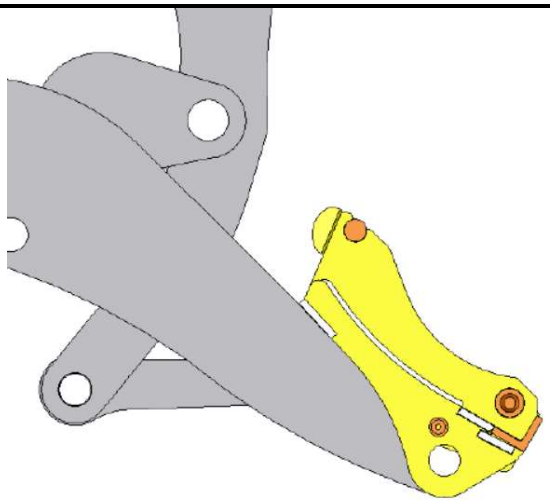
CHECKING DUMP STOPS 1. Park the machine on a firm, level, surface. 2. Tilt attachment to max dump position. 3. Lift loader boom up to point where bell crank stop surface contacts boom torque tube stop surface (usually just before full lift). Refer to OEM specifications for correct angle. *If the angle is not correct, then the stops will have to be adjusted to ensure performance is not affected.*	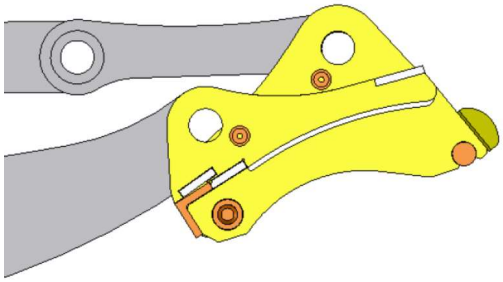

ADJUSTING ROLLBACK & DUMP STOPS

To add stop material, build up the rollback stop surface using welding material, then grind the surface smooth. More than one adjustment may be needed to obtain the OEM specified degree of rollback.

⚠ CAUTION REMOVE PAINT BEFORE WELDING OR HEATING. When paint is heated by welding, or by using a torch, hazardous fumes/dust can be generated. Therefore, it is important to do all work in a well-ventilated area and dispose of paint and solvent properly. TURN OFF ENGINE AND DISCONNECT BATTERY PRIOR TO WELDING. Refer to machine's owner's manual for procedure.

To remove stop material, grind the stop surface of the machine until the OEM specified degree of rollback is obtained.

MAINTENANCE

LUBRICATION

Craig Combo Couplers require some maintenance to ensure a long and trouble-free life. The most crucial maintenance tip required for a CVMC is greasing. Greasing the lock pins on your coupler daily with use will help to ensure smooth operation over its lifetime. A well-greased pin keeps the metal-to-metal contact to a minimum and with it minimizes wear. A proper greasing technique involves pumping grease onto the fitting until you can visibly see the grease coming out around the pin. It is important to have grease come out into the gap around the pin because it protects the area surrounding the pin from dirt getting in and causing abrasive wear on your pins.

There are usually 2 grease points on a Craig Combo Coupler, on the section that contains the lock pin. Seen below:

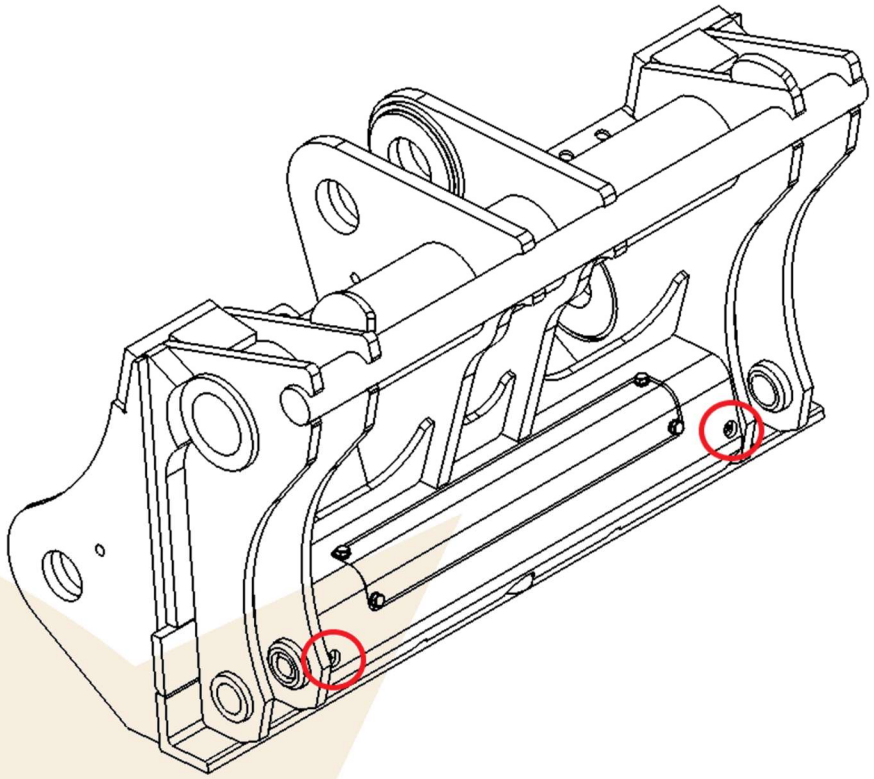

Note: It is essential that the area around the lock cylinder (usually behind the cover) is clear of any dirt or debris

MAINTENANCE

MAINTENANCE OF G.E.T HARDWARE

CAUTION Do Not Apply Any Lubricant of Any Type to G.E.T. Hardware. Any type of fasteners, like bolts and pins, work because of friction. If you apply lubricant to such fasteners, then it will be much easier for them to back off during operation.

CAUTION Safety Glasses Must Be Worn When Striking Bolt Heads. When striking the head of a bolt, it is possible for either sparks to develop or for pieces of the head to break off. ALWAYS WEAR SAFETY GLASSES

INSTALLING BOLT-ON EDGES

Use the following procedure for installing bolt-on edges:

1. Clean all surfaces of rust, paint, nicks, and burrs.
2. Tighten bolts securing the bolt on edge to listed plow bolt torque specifications. Then apply final torque. It is important to only tighten the bolts first, and not torque them up. This is because the previous torqued bolts could back off as the current bolts are torqued.

MAINTENANCE OF BOLT-ON EDGES

Periodically check bolt torque. Insufficient bolt torque can result in cutting edge failure in heavy-duty applications. Therefore, it is important to check the bolts regularly to make sure they are not becoming too loose.

NOTICE Re-torque Bolts After Approximately 4 Hours of Service. This will ensure the bolt on edge is safely secured, and that it has a maximum service life.

The following chart is for determining SAE Bolt Torque Specifications when special torques are not given.

MAINTENANCE

TORQUE CHART - COURSE THREAD									
		SAE J429 Grade 5				SAE J429 Grade 8			
			Tightening Torque (ft-lbs)				Tightening Torque (ft-lbs)		
Nominal Dia. (in.)	Threads per inch	Clamp Load (lbs.)	Lubricated K = 0.15	Thread-locker K = 0.17	Zinc & Dry K = 0.20	Clamp Load (lbs.)	Lubricated K = 0.15	Thread-locker K = 0.17	Zinc & Dry K = 0.20
1/4	20	2029	6.3	7.2	8.5	2864	9.0	10.1	11.9
5/16	18	3342	13	15	17	4719	18	21	25
3/8	16	4940	23	26	31	6974	33	37	44
7/16	14	6777	37	42	49	9568	52	59	70
1/2	13	9046	57	64	75	12771	80	90	106
9/16	12	11599	82	92	109	16375	115	130	154
5/8	11	14408	113	128	150	20340	159	180	212
3/4	10	21322	200	227	267	30101	282	320	376
7/8	9	29436	322	365	429	41556	455	515	606
1	8	38616	483	547	644	54517	681	772	909
1 1/4	7	53786	840	952	1121	87220	1363	1545	1817
1 3/8	6	64096	1102	1249	1469	103939	1786	2025	2382
1 1/2	6	77991	1462	1657	1950	126473	2371	2688	3162

TECHNICAL SUPPORT

If you have followed the maintenance instructions contained in this manual you should have years of trouble-free operation from your Craig attachment. Should you encounter any issue or have any questions about your attachment please contact us at 1-800-565-5007 and ask for technical support.

READING PRODUCT TAG

Craig Manufacturing Ltd. stamps a blue serial tag onto every attachment. The tag is often located on the rear of the attachment in the upper left corner. The information contained on this tag will be required for parts and support. Craig serial numbers begin with a "T" followed by the year then month of construction. For example, T1203 would denote the year 2012 and 03 the month of March.

STORAGE

WARNING Disconnection from the machine and installation must be done by a qualified technician. NEVER trust that the hydraulic system will not fail. ALWAYS lower booms and attachments to the ground before leaving the cab or operator's station. DO NOT work under or around attachments or heavy items not supported by stands, blocks or safety chains. Furthermore, it is important to use chains and/or stands to steady unstable attachments or heavy components that may fall if being disconnected.

END OF SEASON

- Clean equipment thoroughly
- Inspect for damage and order any replacement parts.
- Tighten all hardware and make sure there are no loose connections.
- Paint all replacement parts.
- Paint any bare surfaces to prevent rust.
- Lubricate all grease points. Refer to maintenance section.
- Coat exposed portions of cylinder rods with grease.
- Seal hydraulic system from contaminants.
- Secure all hoses in a manner that prevents potential damage during transport.
- Replace any illegible or missing decals.
- Store unit inside a clean, dry area to prolong life.

BEGINNING OF SEASON

- Review entire operator's manual.
- Clean equipment
- Install any replacement parts.
- Secure all fasteners.
- Check hydraulic hoses for damage and replace as necessary.
- Replace missing or illegible decals.
- Refer to installation section for important information.
- Fully understand this manual and the prime mover operator's manual and take proper precautions prior to testing.

SPECIFICATIONS

Refer to serial tag on the attachment for identification. NOTE: your serial tag may not appear exactly as shown below.

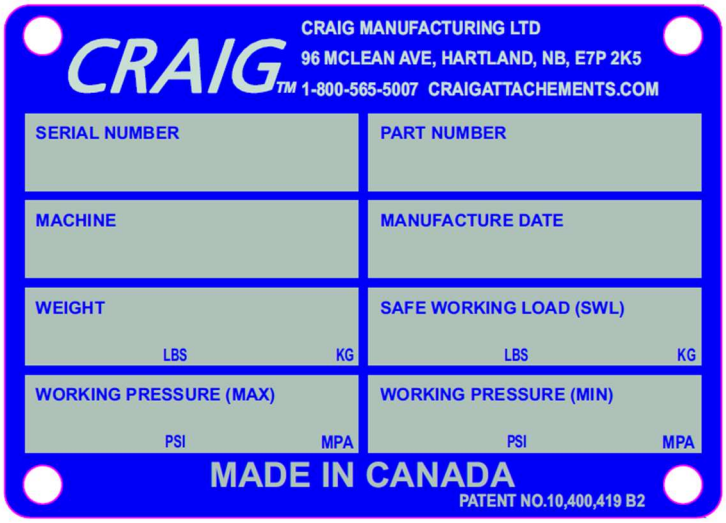

PARTS

To provide you with the most UP-TO-DATE part information, parts diagrams for this attachment have been moved to our Portal website. Please use these diagrams and parts lists to locate your replacement parts.

https://portal.craigattachments.com/

When servicing your attachment, remember to use only original manufacturer replacement parts. Substitute parts may not meet the standards required for safe and dependable operation.

To facilitate parts ordering when contacting any of our branches, please have the product serial number or product part number for your attachment ready to ensure that you receive the correct parts for your attachment.

The product serial number and product part number for your attachment should be recorded in the space provided in this manual. This information may be obtained from the serial number identification plate located on your attachment.

NOTE: Most parts orders (in stock) received by 12:00pm (Atlantic Standard Time) can be shipped the same day or following business day.

WARRANTY

To provide you with the most UP-TO-DATE warranty information, warranty procedures, technical documents, product terms, and product registration, please go to our website at:

https://www.craigattachments.com/

NOTES

NOTES

CRAIG™
ENGINEERING. MANUFACTURING. SERVICE.

HARTLAND BRANCH
96 McLean Avenue
Hartland, New Brunswick
E7P 2K5 Canada

CAMBRIDGE BRANCH
315 Thompson Drive
Cambridge, Ontario
N1T 2B3 Canada

BLACKFALDS BRANCH
88 27323 TWP Rd 394
Lacombe County, Alberta
T4M 0S1 Canada

LAWRENCEBURG BRANCH
408 Commerce Way
Ethridge, Tennessee
38456 USA

1-800-565-5007 • WWW.CRAIGATTACHMENTS.COM